VRB
Heavy-Duty Truss Girder

Instructions for Assembly and Use – Standard Configuration – Issue 10/2018

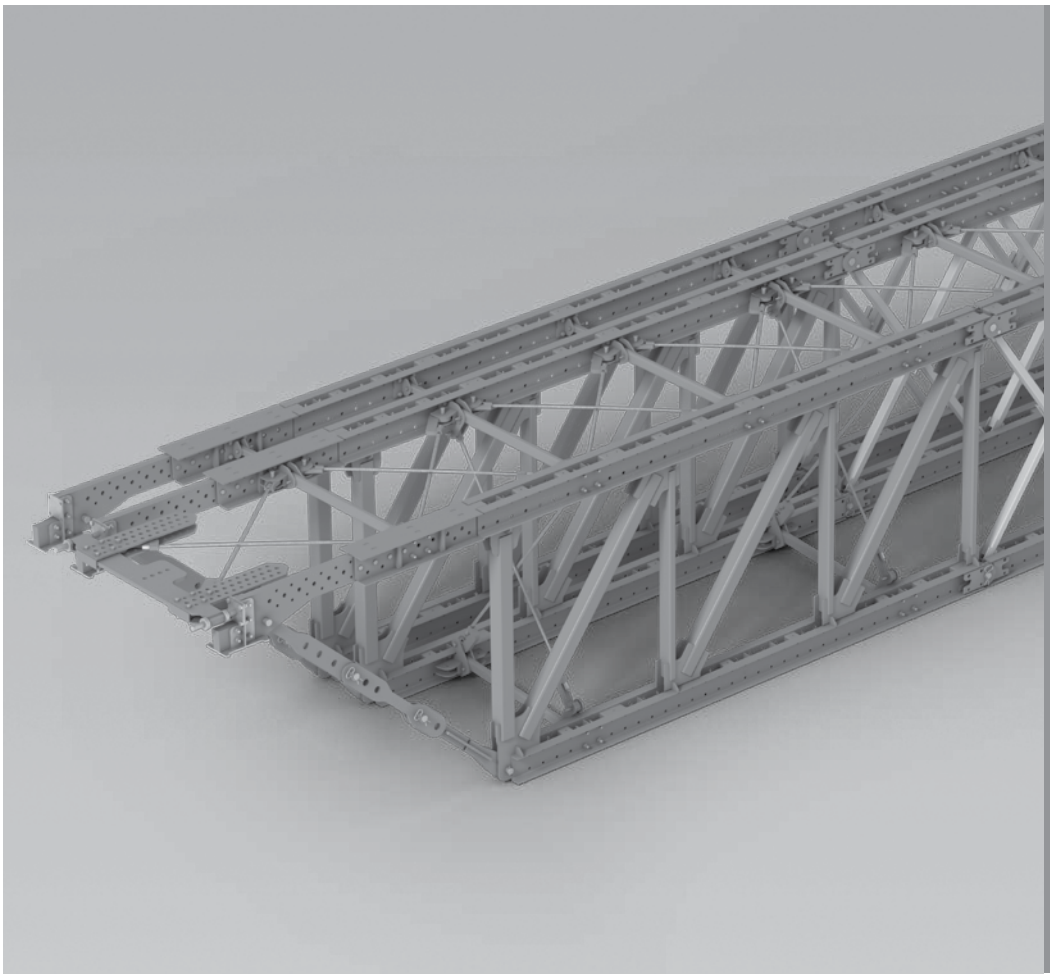

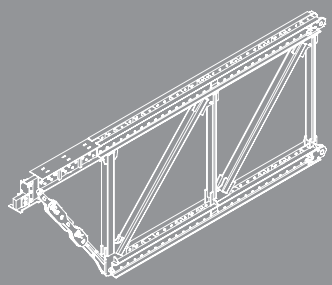

Main Components

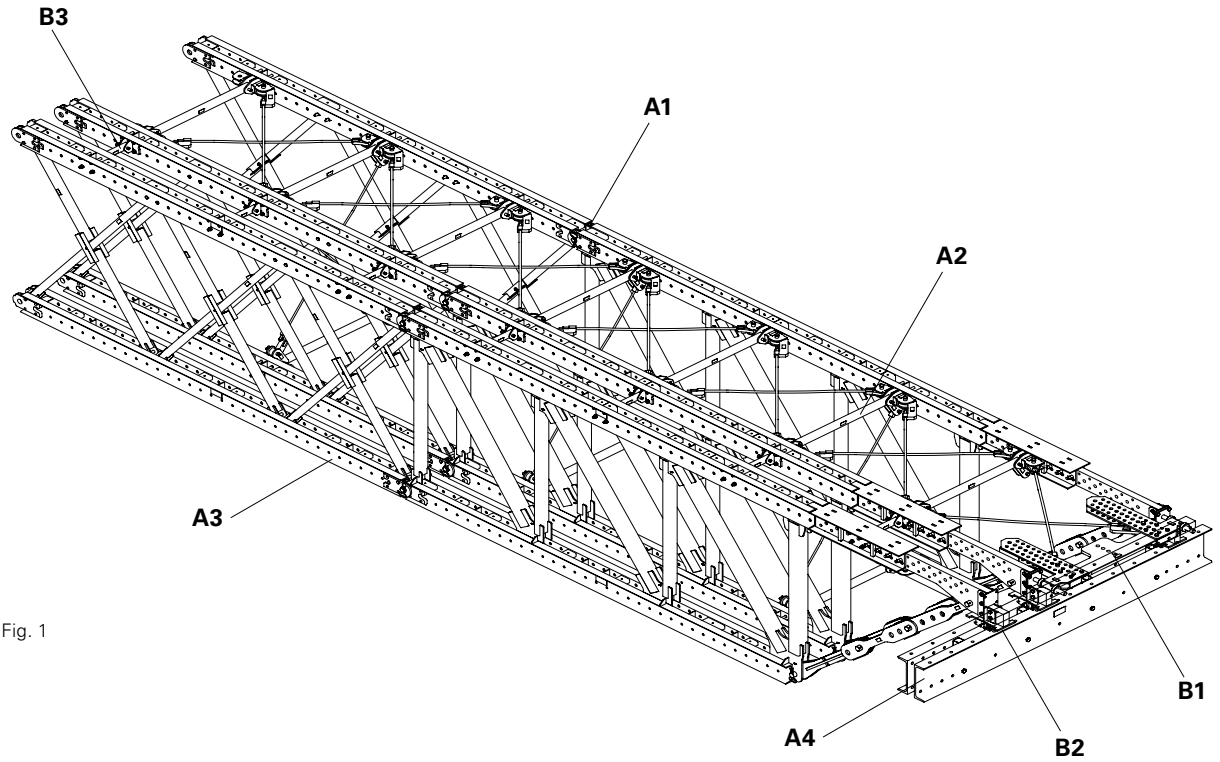

Fig. 1

A1 Assembly of the Frame
A2 Assembly of the Truss Package
A3 Assembly of Single Trusses
A4 Assembly of the Main Beam
B1 Assembly of Truss Package on the Main Beam
B2 Assembly of Single Girders on the Main Beam
B3 Connecting Single Trusses to the Truss Package

Content

Overview
Main Components 3
Overall View of the Horizontal Bracing 4
Overall View of the Vertical Bracing 4
Overall View of the Single Truss 4
Overall View of the Truss Package 5
Key 6

Introduction
Target Groups 7
Additional Technical Documentation 7
Intended Use 8
Instructions on Use 8
Cleaning and Maintenance Instructions 9

Safety Instructions
Cross-System 10
System-Specific 11
Storage and Transportation 11
Assembly 11

Component Overview and Tool List
Parts List 12
Tool List 13
Tightening Torque 13

A Work Preparation
A1 Frame Assembly 14
Assembly Preparation 14
Load-Bearing Capacity 14
Safety Instructions 14
Mounting the Standard Frames 15
Connecting the Standard Frames 17
Connecting the Bearing Frames 19
Adjusting the Bearing Frames 21
A2 Assembly of the Truss Package 24
Mounting the Bracing Shoe 24
Mounting the Bracing Posts 26
Mounting the Second Frame 26
Connecting Both Single Trusses 27
Mounting the Bracing Traverse 28
Mounting the Horizontal Bracing 29
Mounting the Vertical Bracing 32
Coupling with a Single Truss 34
A3 Assembly of Single Trusses 35
Mounting the Coupling Shoes 35
A4 Assembly of the Main Beam 37
Mounting the Horizontal Bearing 37
Supporting with the Cross Fall Bearing 38
Supporting without the Cross Fall Bearing 40
Coupling the Main Beams 41

B Application
B1 Assembly of Truss Package on the Main Beam 42
B2 Assembly of Single Trusses on the Main Beam 45
B3 Connecting Single Trusses to the Truss Package 46

C Support Variations
C1 Support Situation for Longitudinal Inclinations 48
C2 Support Situation for Lateral Inclinations 49
C3 Support Situation for Crossing Angles 50
Crossing Angle from 67.4° to 90° 50
Crossing Angle from 63.4° to 67.4° 51

D Scaffold Installation
D1 Installation of PERI UP Flex 52
Connection Assembly 52
Assembly in the Truss Package 53
Assembly of Bracket Connection 55
Assembly of Bracket on the Truss Package 56

E Removal and Dismantling
E1 Dismantling the Heavy-Duty Truss Girder 58
E2 Dismantling 61
Dismantling Single Trusses 61
Dismantling the Truss Package 62

Components
VRB Heavy-Duty Truss Girder 64

Overall View of the Horizontal Bracing

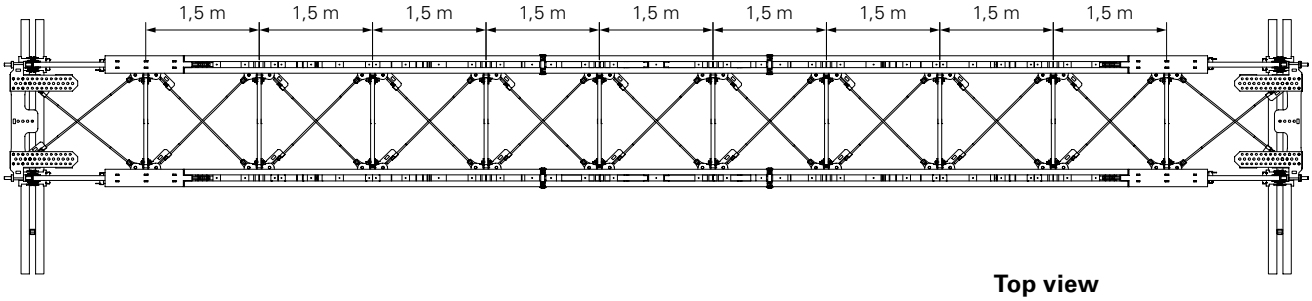

Fig. 2

Overall View of the Vertical Bracing

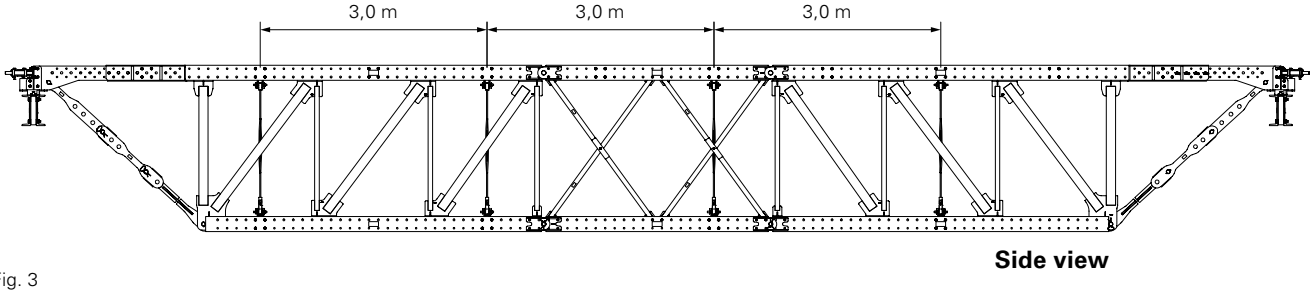

Fig. 3

Overall View of the Single Truss

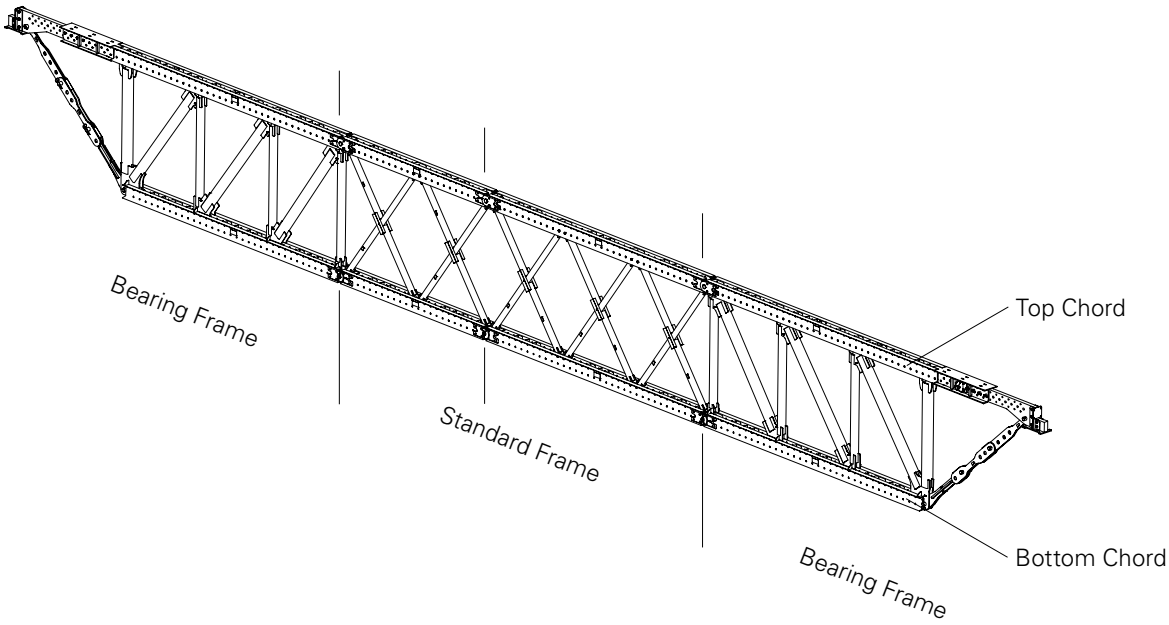

Fig. 4

Overall View of the Truss Package

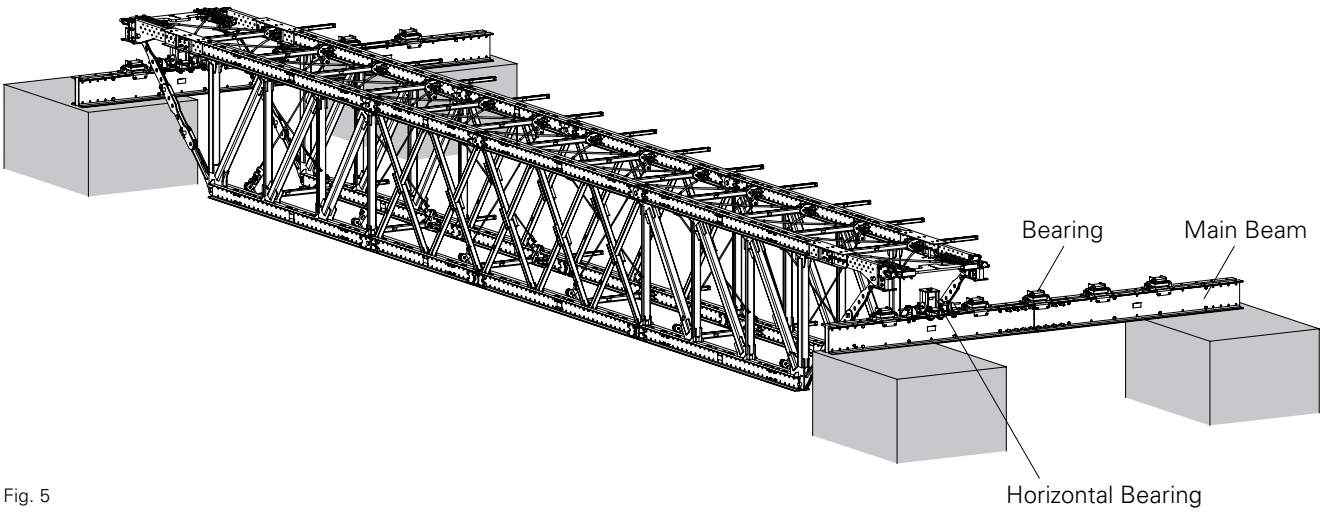

Fig. 5

The Horizontal Bearing accommodates the horizontal forces, e.g. wind loads, and transfers them to the Main Beam. The Bearing, which consists of a Cross Fall Bearing and Longitudinal Bearing, accommodates the vertical forces and transfers them to the Main Beam.

Key

Pictogram | Definition

- Danger / warning / caution
- Information
- To be complied with
- Load-bearing point
- Visual check
- Tip
- Misapplication
- Safety helmet
- Safety shoes
- Safety gloves
- Safety glasses
- Personal protective equipment to prevent falling from a height (PPE)

Arrows

- Arrow representing an action
- Arrow representing a reaction of an action*
- Forces

* if not identical to the action arrow.

Safety instruction categories
The safety instructions alert site personnel to the risks involved and provide information on how to avoid these risks. Safety instructions are featured at the beginning of the section or ahead of the instructions, and are highlighted as follows:

Danger
This sign indicates an extremely hazardous situation which, if not avoided, will result in death or serious injury.

Warning
This sign indicates a hazardous situation which, if not avoided, could result in death or serious injury.

Caution
This sign indicates a hazardous situation which, if not avoided, could result in minor or moderate injury.

Information
This sign indicates situations in which failure to observe the information can result in material damage.

Set-up of the safety instructions

Signal word
Type and source of the danger!
Consequences of non-compliance.
⇒ Avoidance measures.

Dimension specifications
Dimensions are usually given in cm. Other measurement units, e.g. m, are shown in the illustrations.
Load details are usually given in kg. Other measurement units, e.g. t, are specified in the illustrations.

Conventions
- Instructions are numbered with: 1. ....., 2. ....., 3. .....
- The result of an instruction is shown by: →
- Position numbers are clearly provided for the individual components and are given in the drawing, e.g. **1**, in the text in brackets, for example (1).
- Multiple position numbers, i.e. alternative components, are represented with a slash: e.g. **1 / 2**.

Presentational reference
The illustration on the front cover of these instructions is understood to be a system representation only. The assembly steps presented in these Instructions for Assembly and Use are shown in the form of examples with only one component size. They are valid accordingly for all component sizes contained in the standard configuration.

For a better understanding, detailed illustrations are partly incomplete. Some safety installations which have possibly not been shown in these detailed descriptions must nevertheless be available.

Target Groups

Contractors
These Instructions for Assembly and Use are designed for contractors who use the scaffolding either for
- assembling, modifying and dismantling purposes, or use
- it, e.g. for concreting, or who have it used, e.g. for forming operations.

Construction site coordinator
The Safety and Health Protection Coordinator*

- is appointed by the client,
- must identify potential hazards during the planning phase,
- determines measures that provide protection against risks,
- creates a health and safety plan,
- coordinates the protective measures for the contractor and site personnel so that they do not endanger each other,
- monitors compliance with the protective measures.

Competent person
Due to the specialist knowledge gained from professional training, work experience and recent professional activity, the competent person qualified to carry out inspections has a reliable understanding of safety-related issues and can correctly carry out inspections. Depending on the complexity of the test to be undertaken, e.g. scope of testing, type of testing or the use of certain measuring devices, a range of specialist knowledge is necessary.

Qualified personnel
PERI products may only be assembled, modified or dismantled by personnel who are suitably qualified to do so. For the work to be carried out, the qualified personnel must have received instruction** covering at least the following points:
- Explanation of the plan for the assembly, modification or dismantling of the scaffolding in an understandable form and language.
- Description of the measures for safely assembling, modifying or dismantling the scaffolding.
- The preventive measures to be taken to avoid the risk of persons and objects falling.
- Designation of the safety precautions in the event of changing weather conditions which could adversely affect the safety of the PERI products concerned as well as the personnel.
- Details regarding permissible loads.
- Any other risks that are associated with the assembly, modification or dismantling procedures.

- **In other countries, ensure that the relevant national guidelines and regulations in the respective current version are complied with!**
- **If no country-specific regulations are available, it is recommended to proceed according to German guidelines and regulations.**
- **A competent person must be present on site during scaffolding operations.**

* Valid in Germany: Regulations for Occupational Health and Safety on Construction Sites 30 (RAB 30)

** Instructions are given by the contractor himself or a competent person selected by him.

Additional Technical Documentation

Instructions for Assembly and Use:
- VST Heavy-Duty Shoring Tower

Instructions for Use:
- Hydraulic Head Spindle Device VST

- PERI UP Flex
- PERI Design Tables - Formwork and Shoring

Intended Use

Product description
PERI products have been designed for exclusive use in the industrial and commercial sectors by qualified personnel only.

The VRB Heavy-Duty Truss Girder is used for the temporary transfer of static loads from in-situ concrete or prefabricated elements in bridge construction.
Likewise, temporary spans in scaffolding or industrial constructions can be realised.

Features
The VRB Heavy-Duty Truss Girder construction consists of Bearing Frames and Standard Frames which are mounted using connecting parts to form single trusses or truss packages, and then positioned on the Main Beam.
See Fig. 1 - 5.

Two single trusses are coupled together to assemble a truss package and connected by means of Bracing Shoes and Bracing Posts. This package is braced using horizontal and vertical bracing. For connecting additional single trusses, corresponding Coupling Shoes are mounted.
The typical construction consists of a truss package whereby additional single trusses are coupled on the left and right respectively.

Continuous length adjustment is made possible by the telescopic Bearing Frame. Trusses are transported to the place of operation by crane completely assembled. Depending on the inclination, position the Cross Fall Bearing and Longitudinal Bearing between the Bearing Frames and Main Beams.
The trusses are mounted on the Main Beams. Horizontal forces are transferred using the Horizontal Bearing.
Crossing angles can be realised by means of the telescopic Bearing Frame along with the flexible Bracing Traverse. PERI UP Flex can be mounted on the truss with the corresponding connections to provide safe access technology.

Technical data:

- Max. span 40 m
- Continuous length adjustment
- approx. 3,000 kNm perm. bending moment
- Max. longitudinal inclination: 7 %
- Max. lateral inclination: 7 %
- Crossing Angle: 63.4° – 90°

Instructions on Use

Use in a way not intended according to the Instructions for Assembly and Use, or any use deviating from the standard configuration or the intended use, represents a misapplication with a potential safety risk, e.g. risk of falling.

Only PERI original parts may be used. The use of other products and spare parts is not allowed.

Changes to PERI components are not permitted.

Cleaning and Maintenance Instructions

Clean the elements after each use to maintain the value and usability of the PERI products over the long term.

Some repair work may also be inevitable due to the tough working conditions.

The following points should help to keep cleaning and maintenance costs as low as possible.

Damaged components must be exchanged immediately on site and may no longer be used.

Provide suitable support for the components during cleaning so that no unintentional change in their position is possible.

Do not clean powder-coated or galvanised components with steel brushes or metal scrapers.

Mechanical components, e.g. spindles, must be cleaned of dirt or concrete residue before and after use, and then greased with a suitable lubricant.

Do not clean components suspended on crane lifting gear.

Any repairs to PERI products are to be carried out by PERI qualified personnel only.

Only PERI original components are used when replacing parts.

Information regarding the use of the Longitudinal and Cross Fall Bearings
The bearing surfaces of the Longitudinal and Cross Fall Bearings are lubricated with long-life grease and require no special maintenance.
Avoid any soiling of the bearings. It is essential to remove external soiling before use. See “Bearing with the Cross Fall Bearing” on Page 38 and “Bearing without the Cross Fall Bearing” on Page 40.

Cross-System

General
The contractor must ensure that the Instructions for Assembly and Use supplied by PERI are available at all times and understood by the site personnel.

These Instructions for Assembly and Use can be used as the basis for creating a risk assessment. The risk assessment is compiled by the contractor. However, these Instructions for Assembly and Use do not replace the risk assessment!

Always take into consideration and comply with the safety instructions and permissible loads.

For the application and inspection of PERI products, the current safety regulations and guidelines valid in the respective countries must be observed.

Materials and working areas are to be inspected on a regular basis, especially before each use and assembly, for:
- signs of damage,
- stability and
- functionality.

Damaged components must be exchanged immediately on site and may no longer be used.

Safety components are to be removed only when they are no longer required.

Components provided by the contractor must conform to the characteristics required in these Instructions for Assembly and Use, as well as all valid construction guidelines and standards. Unless otherwise indicated, this applies in particular to:
- timber components: Strength Class C24 for Solid Wood according to EN 338.
- scaffold tubes: galvanised steel tubes with minimum dimensions of Ø 48.3 x 3.2 mm according to EN 12811-1:2003 4.2.1.2.
- scaffold tube couplings according to EN 74.

Deviations from the standard configuration are only permitted after a further risk assessment has been carried out by the contractor.
Appropriate measures for working and operational safety, as well as stability, are defined on the basis of this risk assessment.
Corresponding proof of stability can be provided by PERI on request if the risk assessment and resulting measures to be implemented are made available.

Before and after exceptional occurrences that may have had an adverse effect regarding the safety of the Heavy-Duty Truss Girder, the contractor must immediately
- create an additional risk assessment, with appropriate measures for ensuring the stability of the formwork system being carried out based on the results,
- arrange for an extraordinary inspection to be carried out by competent person qualified to do so. The aim of this inspection is to identify and rectify any damage in good time, in order to guarantee the safe use of the Heavy-Duty Truss Girder.

Exceptional occurrences can include:
- accidents,
- longer periods of non-use,
- natural events, e.g. heavy rainfall, icing, heavy snowfall, storms or earthquakes.

Assembly, modification and dismantling work
Assembly, modification or dismantling of Heavy-Duty Truss Girders may only be carried out by qualified persons and under the supervision of a competent person. The qualified persons must have received appropriate training for the work to be carried out with regard to specific risks and dangers.

On the basis of the risk assessment and the Instructions for Assembly and Use, the contractor must create installation instructions, in order to ensure safe assembly, modification and dismantling of Heavy-Duty Truss Girders.

Before initial use, the safe functioning of the Heavy-Duty Truss Girder must be checked by a person qualified to carry out the inspection. The results of the inspection must be documented in an inspection record.

The contractor must ensure that the personal protective equipment required for the assembly, modification or dismantling of the shoring system, e.g.
- safety helmet,
- safety shoes,
- safety gloves,
- safety glasses,

is available and used as intended.

If personal protective equipment against falling (PPE) is required or specified in local regulations, the contractor must determine appropriate attachment points on the basis of the risk assessment.
The contractor stipulates the PPE to be used to prevent falling.

The contractor must
- provide safe working areas for site personnel which are to be reached through the provision of safe access ways. Areas of risk must be cordoned off and clearly marked.
- ensure stability during all stages of construction, in particular during assembly, modification and dismantling operations.
- ensure and prove that all loads can be safely transferred.

Utilisation
Every contractor who uses or allows the scaffolding system or sections of the scaffolding system to be used, is responsible for ensuring that the equipment is in good condition.

If the scaffolding system is used successively or at the same time by several contractors, the health and safety coordinator must point out any possible mutual hazards, and all work must then be coordinated.

System-Specific

For each time of use, a detailed project-specific static calculation and planning is required!
Both assembly and dismantling must be planned on a project-specific basis while taking into account all intermediate status and individual boundary conditions.

Load-distributing support used for the assembly, e.g. planking, must match the respective base. If several layers are required, planks are to be arranged crosswise.

Secure individual girders during assembly in order to prevent tipping.

Use PERI UP Flex to ensure safe and secure access to all working areas.

Lock the Decking Transom using the integrated protection against lifting. The securing hook must be flush with the deck.

Secure wedges using a 500-g hammer.

Secure fitting pins with cotter pins.

Secure bolts with self-locking nuts. Only use the self-locking nuts once.

When transporting by crane:
- Ensure that components are picked up and set down so that unintentional falling over, falling apart, sliding, falling down or rolling is avoided.
- No persons are allowed to remain under the suspended load.
- Leave the area of risk on the Main Beam.
- Remove or secure any loose components.
- Do not transport persons, building materials or tools when moving with the crane.

Storage and Transportation

Store and transport components ensuring that no unintentional change in their position is possible. Detach lifting accessories and slings from the lowered components only if they are in a stable position and no unintentional change is possible.

Do not drop the components.

Use PERI lifting accessories and slings and only the lifting points provided on the component.

During the moving procedure
- ensure that components are picked up and set down so that unintentional falling over, falling apart, sliding, falling down or rolling is avoided.
- no persons are allowed to remain under the suspended load.

Always guide pre-assembled scaffolding bays, scaffolding units or scaffolding sections with ropes when moving them by crane.

The access areas on the construction site must be free of obstacles and tripping hazards, as well as being slip-resistant.

For transportation, the surface used must have sufficient load-bearing capacity.

Use original PERI storage and transport systems, e.g. crate pallets, pallets or stacking devices.

Assembly

The contractor must ensure that the user has the appropriate and sufficient number of tools, lifting equipment and slings, suitable and sufficient space for assembly and storage, as well as adequate crane capacity at his disposal.

Assess the degree of risk in each individual case and, if necessary, take measures to prevent or at least minimise the risk.

If anti-fall protection cannot be used or has to be removed due to operational reasons, safety equipment must be installed in its place in order to prevent or arrest falls from any height.

If the use of fall arrest equipment is deemed to be inappropriate, personal protection equipment (PPE) can be used if suitable fixing points are available.

Site personnel are forbidden to remain in areas below where assembly work is being carried out unless the area of risk has been provided with sufficient protection against falling, overturned, sliding or rolling objects and masses.

Cordon off areas of risk.

Component Overview and Tool List

Pos. no.	Component name	Item no.
1	**Standard Frames**	
1.1	Standard Frame 3.0 m VRB	127285
1.2	Standard Frame 4.5 m VRB	125155
1.3	Standard Frame 6.0 m VRB	125156
2	**Bearing Frames**	
2.1	Bearing Frame 5.25 m VRB	128086
2.2	Bearing Frame 6.0 m VRB	126578
	Bracing components	
3	Bracing Shoe VRB	125764
4	Vertical Bracing Shoe VRB	125770
5	Coupling Shoe VRB	125732
6	Bracing Post	
6.1	Bracing Post 1.50 m VRB	125734
6.2	Bracing Post 2.25 m VRB	125736
7	Coupling Posts	
7.1	Coupling Post 0.5 m VRB	125746
7.2	Coupling Post 1.0 m VRB	125756
8	Eye Nut DW 20 VRB	125727
9	Articulated Spanner DW 20 VRB	125741
10	Tie Rod DW 20, Special Length	030700
11	Eye Nut RCS DW 15	115378
12	Articulated Spanner RCS DW 15	115375
13	Tie Rod DW 15, Special Length	030030
	Bearings	
20	Centering Plate HDT-VRB	128019
21	Cross Fall Bearing VRB	127136
22	Longitudinal Bearing VRB	127143
23	Horizontal Bearing-2 VRB	131852
24	Cross Fall Adapter VRB	131031
	Bracing Traverses	
30	Bracing Traverse 150 VRB	128091
31	Bracing Traverse Connector VRB	128103
32	Bracing Spindle VRB	128098
35	**Main Beams**	
35.1	Main Beam 350 VRB	126059
35.2	Main Beam 500 VRB	126062
35.3	Main Beam 800 VRB	126065
36	Main Beam Connector VRB	126050

Pos. no.	Component name	Item no.
	Small components	
40	Cotter Pin 4/1	018060
41	Cotter Pin 5/1	022230
42	Cotter Pin 6/1 Ø 50 VRB	125356
43	Fitting Pin Ø 21 x 105 VRB	125349
44	Fitting Pin Ø 21 x 120	104031
45	Fitting Pin Ø 26 x 105 VRB	125345
46	Fitting Pin Ø 26 x 105 VRB	111567
47	Fitting Pin Ø 30 VRB	125347
48	Bolt Ø 50 x 155	113626
49	Bolt Ø 50 x 250	125355
52	Bolt ISO 4014 M20 x 150-8.8	711084
60	Hex. Nut DW 15 SW 30/50	030070
61	Hex. Nut DW 20 SW 36/60	030580
62	Nut ISO 7040 M20-8	781053
70	**Climbing Rails**	
70.1	Climbing Rail RCS 148	114166
70.2	Climbing Rail RCS 248	109469
70.3	Climbing Rail RCS 348	109470
70.4	Climbing Rail RCS 398	112141
71	Cross Connector RCS	123509
	PERI UP Connection	
80	Connector UP-VRB	126355
81	Bracket Connector UP-VRB	126345
	PERI UP	
90	Top Standard UVH 150	100003
91	Ledger UH 75 Plus	114629
92	Ledger UH 100 Plus	114632
93	Ledger UH 300 Plus	114651
94	Steel Deck UDG 25 x 300	124915
95	Top Standard UVH 100	100000
96	Console Bracket UCM 75 with Spigot	112678

Component Overview and Tool List

Tool name
Ratchet Wrench
Extension for the Ratchet Wrench
Wrench Socket SW 36
Allen Key SW 6 / SW 8 / SW 10
Spirit Level
Cordless Screwdriver
Screw Bits TORX 25, 30
Ring / Open-End Wrench SW 13 / SW 16 / SW 18 / SW 24 / SW 30 / SW 36
4-Sling Lifting Gear
Circular Saw
Torque Wrench
Hammer
Round Slings

Tightening Torque

For the screw connections, PERI recommends the following "hand-tightened" tightening torque MA, hand-tightened according to Eurocode 3 and DIN EN 1090-2:

Bolt	M20	M24	M30	M36
MA, hand-tightened [Nm]	60	110	220	350

Assembly Preparation

General information

- The project-related assembly plan from PERI is binding for the assembly of single trusses and truss packages.
- For assembling the Heavy-Duty Truss Girder, prepare a designated area with the following features:
  - The surface must be flat and horizontal.
  - The area must be at least the size of the fully assembled truss package.
  - The area must have sufficient load-bearing capacity to accommodate the fully assembled truss package.
- Make sure that the Ø 26 holes in the flanges of the Climbing Rail are at the bottom.
- Drive in bolts which are vertically mounted from top to bottom.
- For those bolts that are mounted horizontally, no mounting direction is prescribed. PERI recommends always mounting the bolts from the same direction.
- All bolts must be secured by means of the appropriate cotter pins.

- PERI recommends using the Climbing Rail RCS as an assembly aid. This facilitates safe assembly of the Heavy-Duty Truss Girder and its components.
- Alternatively, assembly can also take place horizontally.

Load-Bearing Capacity

Attach the frames to the fitting pins in the top chord or with lifting straps to the crane.
(Fig. A1.01).

Bearing capacity of the load-bearing points:

- Fitting Pin Ø 21 (44) : 2,000 kg
- Fitting Pin Ø 26 (44) : 3,650 kg

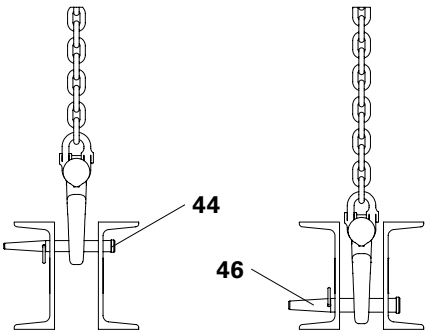

Fig. A1.01

- Take into consideration the project-specific dead weight of the truss girder.
- Alternatively, load-bearing straps with the appropriate load capacity can be used.
- The attachment points are determined through a series of tests to ensure that the frames and truss girders are in the right position when being craned in.

Safety Instructions

Danger

Heavy moving parts can fall down or overturn!
During assembly, there is a risk of hands and other body parts being crushed.

⇒ Do not stand under suspended loads.
⇒ Use a guide rope when moving components.
⇒ Maintain an appropriate safety distance.
⇒ Do not stand between moving elements.

Mounting the Standard Frames

Components

1	Standard Frame VRB	1x

Assembly aids for the components

40	Cotter Pin 4/1	4x
44	Fitting Pin Ø 21 x 120	4x
70	Climbing Rail RCS 398	2x
71	Cross Connector RCS	2x

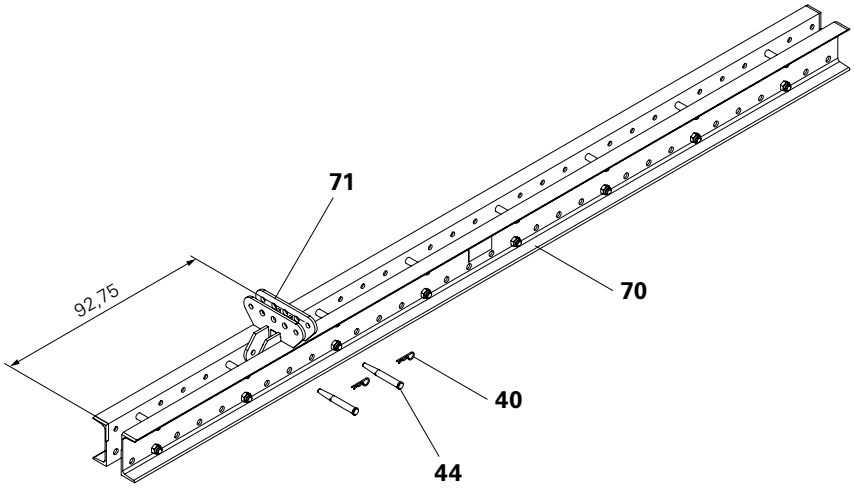

Fig. A1.02

- The Cross Connector can only be mounted at certain positions on the frame. Ensure that all the other components of the truss girder can also be mounted. (Fig. A1.02)
- The distance from the centre of the Cross Connector to the edge is 92.75 cm.

Detach the frame from the crane lifting gear only after all bolts have been inserted and secured.

Mounting the assembly aids

1. For assembling the first Standard Frame (1), lay out two Climbing Rails (70).
2. Fix one Cross Connector (71) to each of the Climbing Rails by means of fitting pins (46) and secure with a cotter pin (41). (Fig. A1.02 + A1.03)

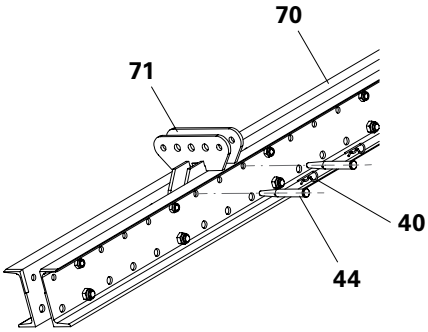

Fig. A1.03

A1 Assembly of the Frame

- The Climbing Rails are positioned transverse to the direction of assembly of the single trusses or truss package.
- The Climbing Rail distance is 237.5 cm. (Fig. A1.04)
- Ensure that there is sufficient space to assemble the Bearing Frame.

Assembly

1. Place the Standard Frame (1) over the Cross Connectors (71) using the crane and set down on the Climbing Rails (70).
2. Align the Standard Frame with the holes in the bottom chord.
3. Fix the Standard Frame using fitting pins (44) and secure with cotter pins (40).

(Fig. A1.04)

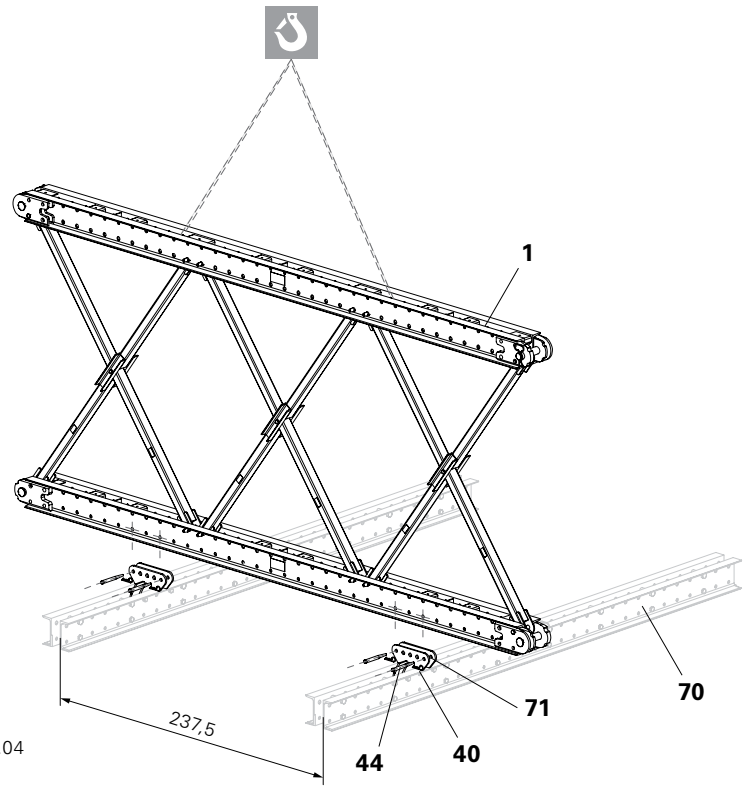

Fig. A1.04

The Climbing Rails serve as assembly aids for ensuring safe and secure assembly of the Heavy-Duty Truss Girder. It is important that the Climbing Rails are mounted as close as possible to the frame centre of gravity. However, this is not always possible because the Cross Connector cannot be mounted in this position, see Detail A. Fig. A1.05 shows a schematic view of the truss assembly complete with Bearing Frame and various Standard Frames.

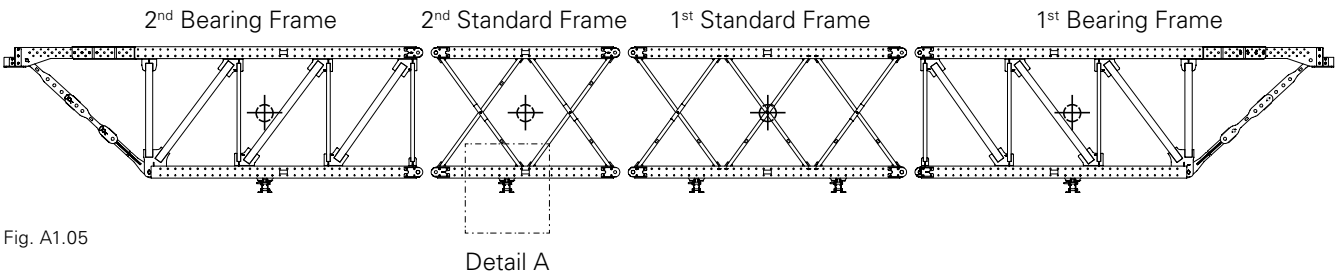

Fig. A1.05

Connecting the Standard Frames

Assembly

1. Lay out an additional Climbing Rail next to the first Standard Frame. The Climbing Rail must be mounted as close as possible to the centre of gravity of the second Standard Frame (1b). (Fig. A1.06)
2. Fix one Cross Connector to the Climbing Rail by means of fitting pins (46) and secure with cotter pins.

The position of the Cross Connector is the same on all Climbing Rails. (Fig. A1.02)

3. Place an additional Standard Frame (1b) over the Cross Connector using the crane and set down on the Climbing Rail. (Fig. A1.06)

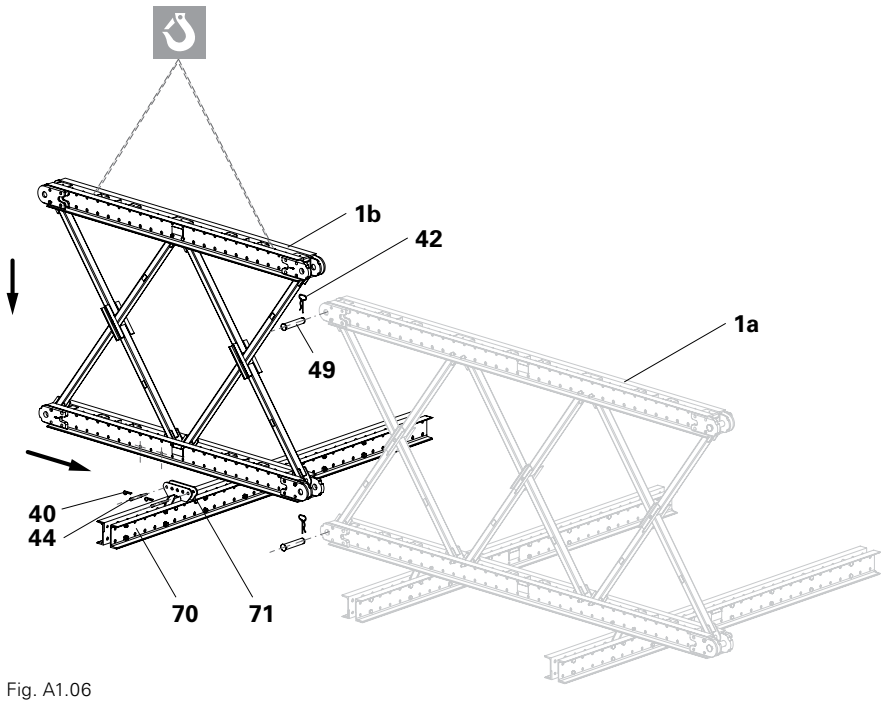

Fig. A1.06

Warning

Risk of crushing through heavy moving parts!
Risk of hands being crushed when coupling the two frames.

⇒ Do not take hold of anything between the chord plate connections.
⇒ Guide the frame using only top and bottom chords.

4. Remove cotter pins (42) from both frames and pull out bolts (49).
5. Push the second Standard Frame (1b) together with the first Standard Frame (1a).

Ensure that the single chord plate is inserted into the double chord plate in the chord plate connections of the top and bottom chords. (Fig. A1.07)

6. Connect the Standard Frames (1a + 1b) using two bolts (49) and secure each with a cotter pin (42). (Fig. A1.07)
7. Align the Climbing Rail with the holes in the bottom chord of the Standard Frame and the Cross Connector.
8. Fix the Standard Frame on the Cross Connector using fitting pins and secure with cotter pins.
9. Mount all additional Standard Frames in the same way as specified in the assembly plan.

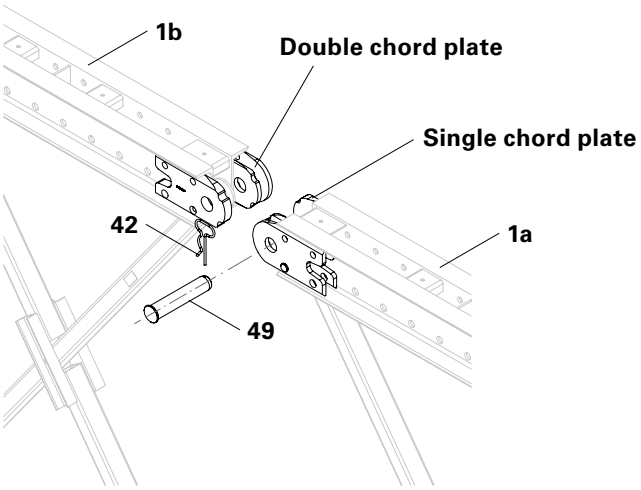

Fig. A1.07

Connecting the Bearing Frames

Components

2	Bearing Frame
40	Cotter Pin 4/1
42	Cotter Pin 6/1 Ø 50 VRB
44	Fitting Pin Ø 21 x 120
49	Bolt Ø 50 x 250

!

Detach the frame from the crane lifting gear only after all bolts have been inserted and secured.

Assembly

1. Lay out one Climbing Rail (70) next to the first Standard Frame (1). The Climbing Rail must be positioned under the centre of gravity of the Bearing Frame (2).
2. Fix one Cross Connector (71) to the Climbing Rail by means of fitting pins (46) and secure with cotter pins (41).
3. Place the Bearing Frame over the Cross Connector using the crane and set down on the Climbing Rail.
4. Remove cotter pins (42) from both frames and pull out bolts (49).

(Fig. A1.08)

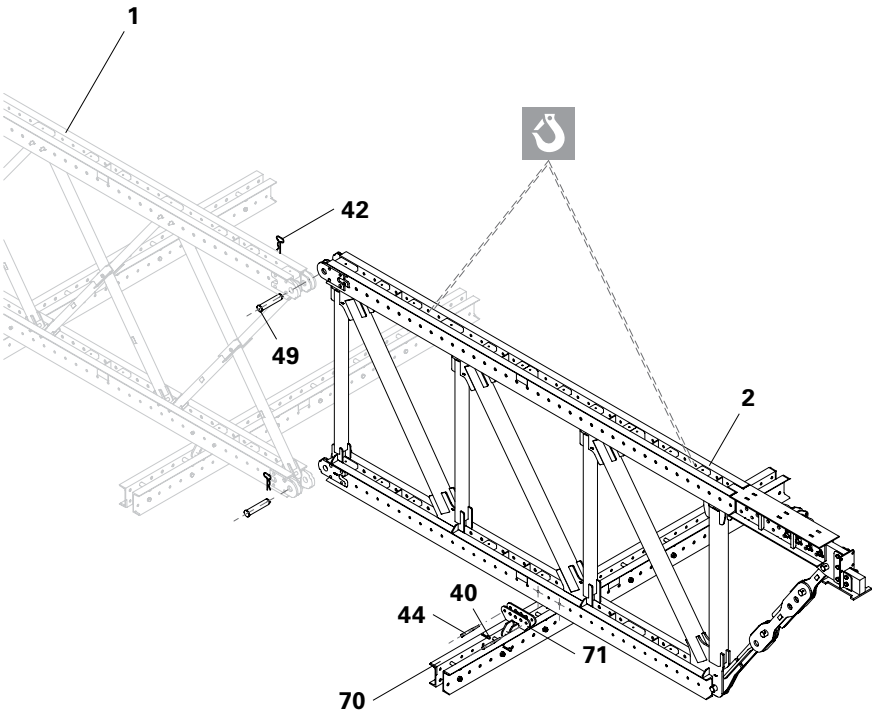

Fig. A1.08

Warning

Risk of crushing through heavy moving parts!
Risk of hands being crushed when coupling the two frames.

⇒ Do not take hold of anything between the chord plate connections.
⇒ Guide the frame using only top and bottom chords.

5. Connect the Bearing Frame (2) to the Standard Frame (1).

Ensure that the single chord plate is inserted into the double chord plate in the chord plate connections of the top and bottom chords (Fig. A1.09).

6. Connect both frames using two bolts (49) and secure each bolt with a cotter pin (42).
7. Align the Climbing Rail with the holes in the bottom chord of the Bearing Frame and the Cross Connector.
8. Fix the Bearing Frame on the Cross Connector using fitting pins (44) and secure with cotter pins (40).
9. Mount the second Bearing Frame at the other end of the single girder in the same way.

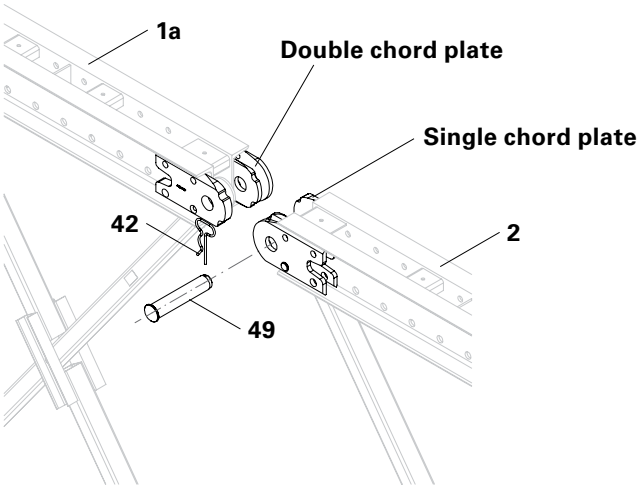

Fig. A1.09

Adjusting the Bearing Frames

The Bearing Frame consists of:
- top chord
- bottom chord
- vertical struts
- diagonal struts
- telescopic box

(Fig. A1.10)

The Telescopic Box VRB consists of:
- Tension profile (2.3)
- Telescopic arm (2.4)
- Telescopic arm guide (2.5)

With the help of the telescopic arm, the Bearing Frame can be extended in six increments of 12.5 cm.
The Bearing Frame can be extended by a total of 75 cm.

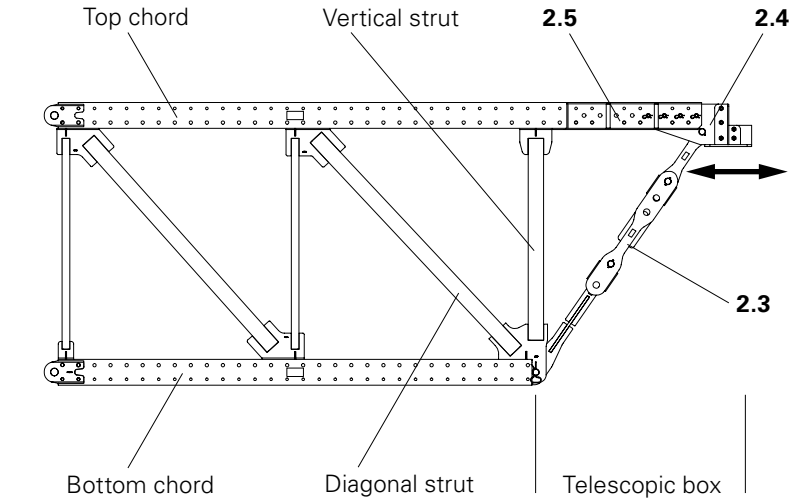

Fig. A1.10

!

⇒ The four fitting pins (47) must be mounted in the four outer holes of the telescopic arm guide (2.5).
⇒ Also when fully extended, all four fitting pins (47) must be securely mounted.
⇒ The telescopic arm (2.4) must always be fixed with all four fitting pins (47).

(Fig. A1.11)

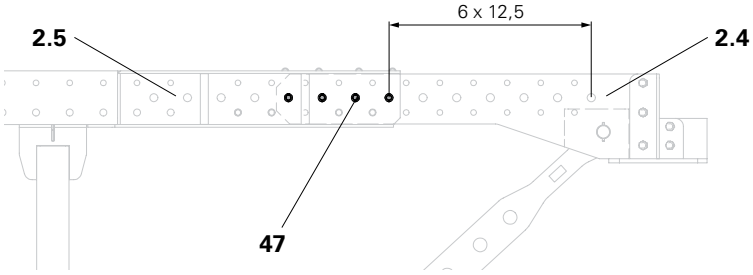

Fig. A1.11

→

It is helpful having a second person to assist in carrying out the following steps.

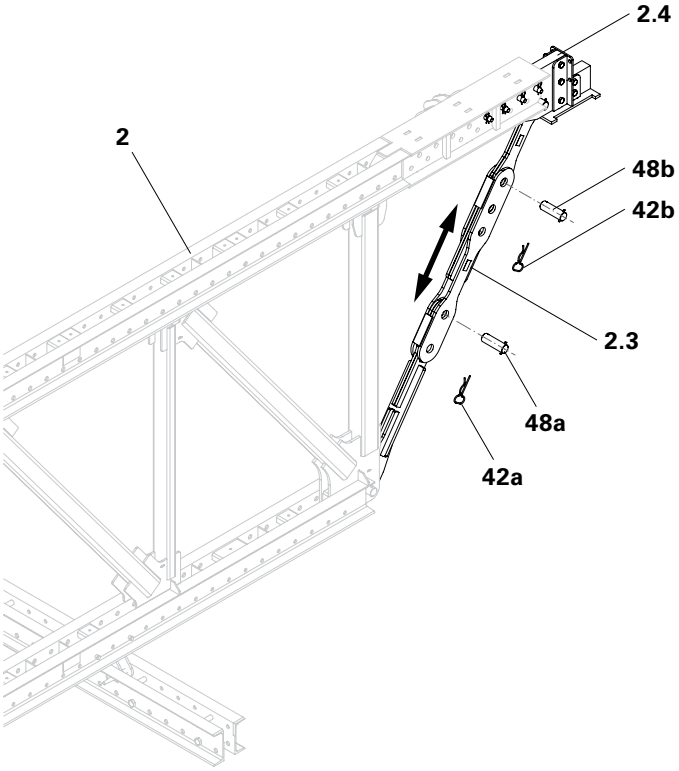

Fig. A1.12

Components

41	Cotter Pin 5/1
42	Cotter Pin 6/1 Ø 50 VRB
47	Fitting Pin Ø 30 VRB
48	Bolt Ø 50 x 155

Assembly

1. Remove cotter pins (42a) and (42b). (Fig. A1.12)
2. Pull out bolts (48a) and (48b).
3. Move tension profile (2.3) until the required position of the bolt (48a) corresponds to the positioning matrix. (Fig. A1.15)

! Warning

Heavy moving components!
These can fall down or cause hands to be crushed.

⇒ Move tension profile carefully thus ensuring that it does not slide out of the guide.
⇒ Keep hands well away from the holes on the tension profile.
⇒ Wear protective gloves and safety shoes.

4. Insert bolts (48a) and secure with cotter pins (42a). (Fig. A1.12)
5. Remove cotter pin (41) and pull out fitting pin (47). (Fig. A1.13)
6. Adjust the telescopic arm (2.4) to the required length. The tension profile (2.3) is automatically adjusted to the correct length.
7. Insert fitting pin (47) and secure with cotter pin (41).
8. Insert bolt (48b) and secure with cotter pin (42b).

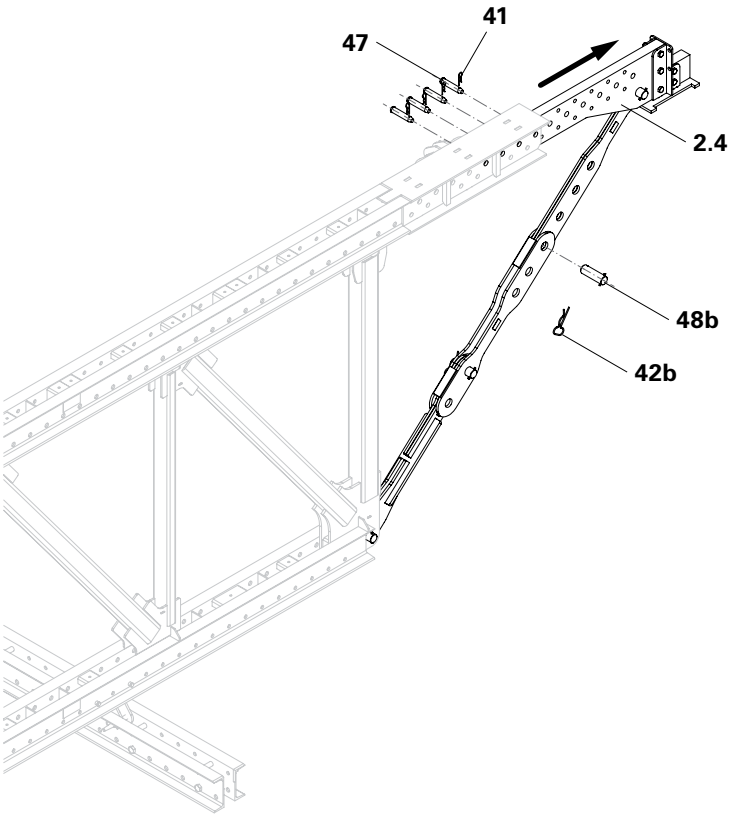

Fig. A1.13

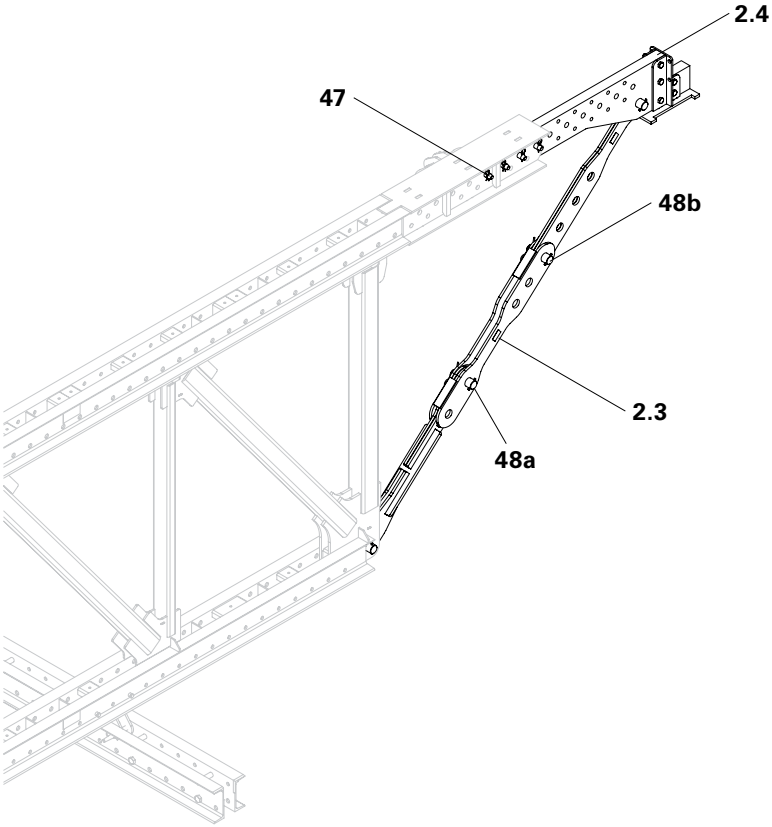

Fig. A1.14

Fig. A1.15 shows the positions for inserting bolts 48a and 48b depending on the extension of the telescopic arm.

Assembly of the frame is now complete.
If a truss package is to be mounted, see Section “A2 Assembly of the Truss Package” on Page 24.
If a single truss is to be mounted, see Section “Assembly of Single Trusses” on page 35.

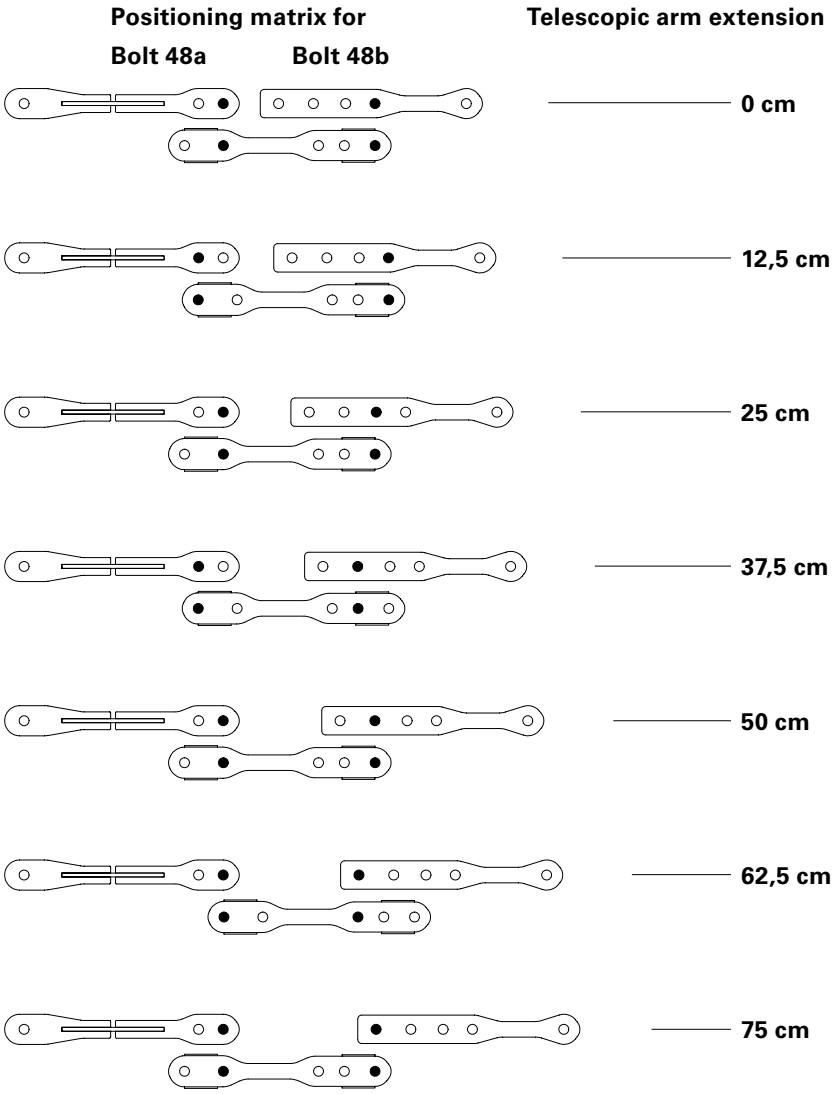

Fig. A1.15

Mounting the Bracing Shoes

Components

3	Bracing Shoe VRB
4	Vertical Bracing Shoe VRB
5	Coupling Shoe VRB
52	Bolt ISO 4014 M20 x 150-8.8
62	Nut ISO 7040 M20-8

Assembly for
Bearing Frame 6.0 m VRB

1. Position Bracing Shoe (3) directly next to the fitting pin (47).
2. Fix with bolt (52) and nut (62).
3. Alternately mount a Bracing Shoe (3) and a Vertical Bracing Shoe (4) on the top chord. The spacing is 150 cm in each case.
4. Mount Vertical Bracing Shoes (4) on the bottom chord in the same way. The position corresponds to the Vertical Bracing Shoes (4) on the top chord. The spacing is 300 cm in each case.

(Fig. A2.01 + A2.03)

Assembly for
Bearing Frame 5.25 m VRB

1. Position the Bracing Shoe (3) directly above the first vertical strut.
2. Further assembly corresponds to the Bearing Frame 6.0 m as of Step 2.

(Fig. A2.02 + A2.03)

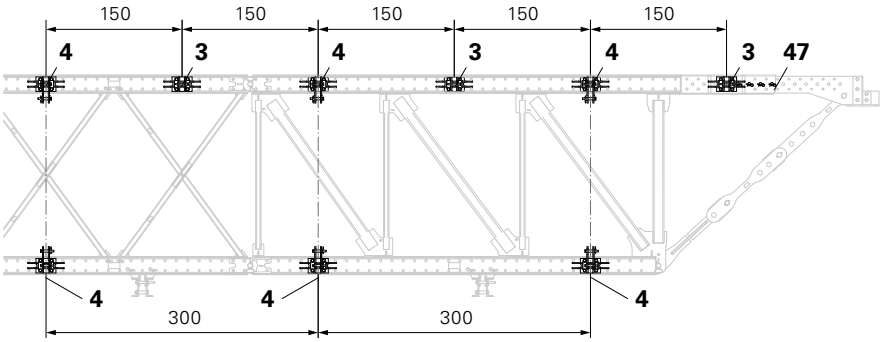

Fig. A2.01

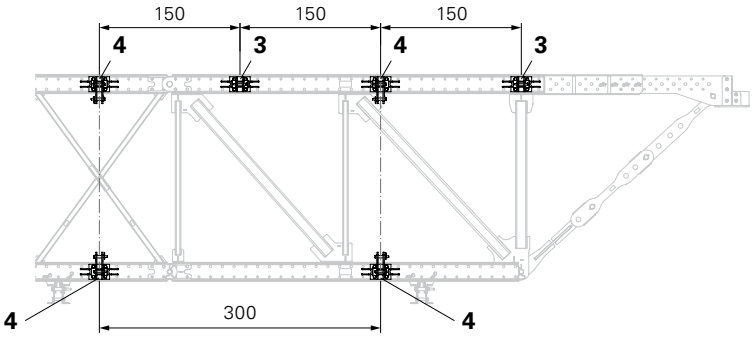

Fig. A2.02

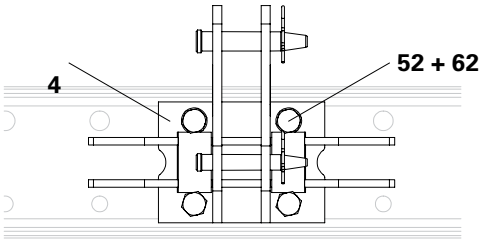

Fig. A2.03

Connecting a single truss
When connecting a single truss to the truss package, Coupling Shoes (5) must be mounted on the rear.
In this case, a Coupling Shoe (5) is mounted together with a Bracing Shoe (3) or Vertical Bracing Shoe (4) on the top and bottom chords.
(Fig. A2.04 + A2.04a)

Mount the connections for the PERI UP Flex system together with the Bracing Shoes. See Section "D1 Installation of PERI UP Flex" on Page 52.

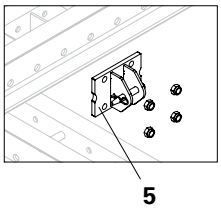

Fig. A2.04a

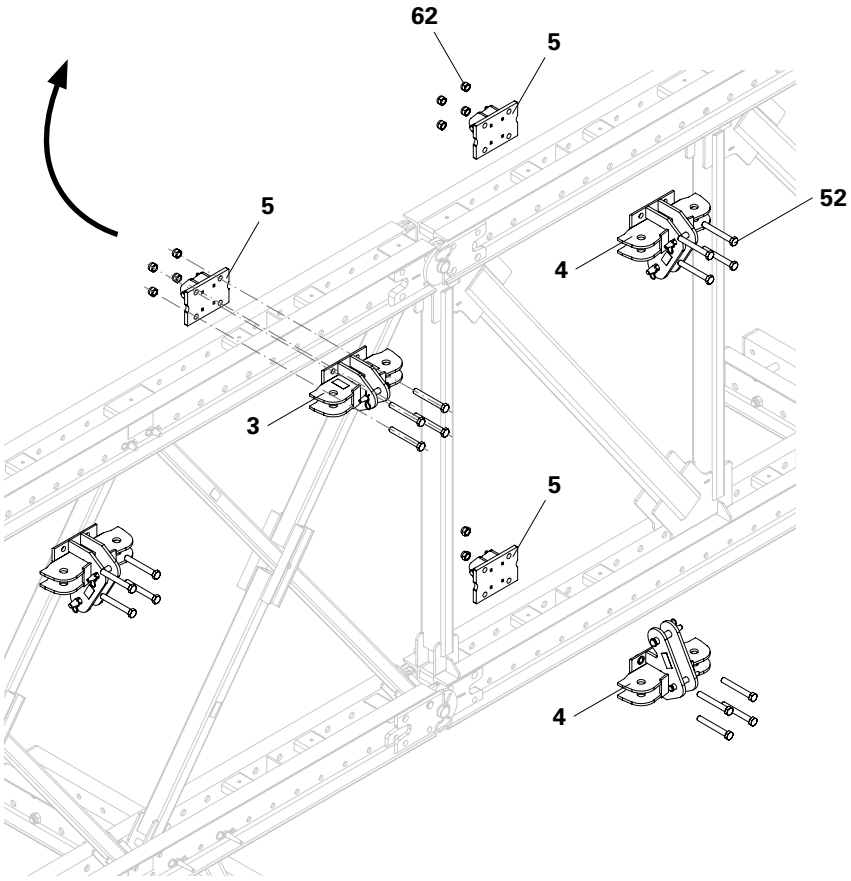

Fig. A2.04

Mounting the Bracing Posts

Components

6.1	Bracing Post 1.50 m VRB
40	Cotter Pin 4/1
43	Fitting Pin Ø 21 x 105 VRB

Assembly

1. Attach a Bracing Post (6.1) to each Bracing Shoe (3) using fitting pins (43) and secure with cotter pins (40).
2. Attach a Bracing Post (6.1) to each Vertical Bracing Shoe (3) using fitting pins (43) and secure with cotter pins (40).

(Fig. A2.05 + A2.06)

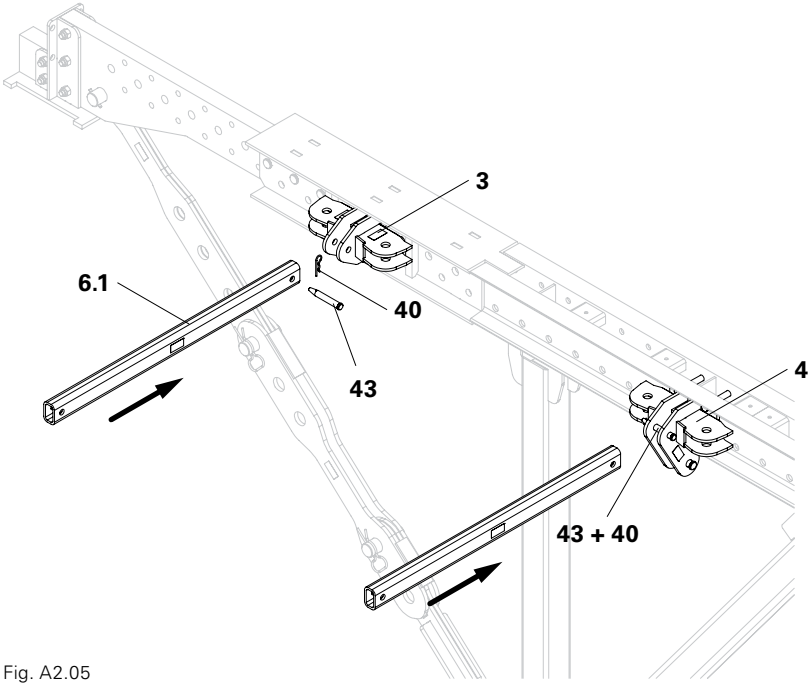

Fig. A2.05

Mounting the Second Frame

The assembly of the bracing components takes place inversely to those of the first single truss.

Mount a second single truss on the Climbing Rail (70) in the same way. (Fig. A2.06)
The spacing to the first single truss is axis - axis 150 cm.

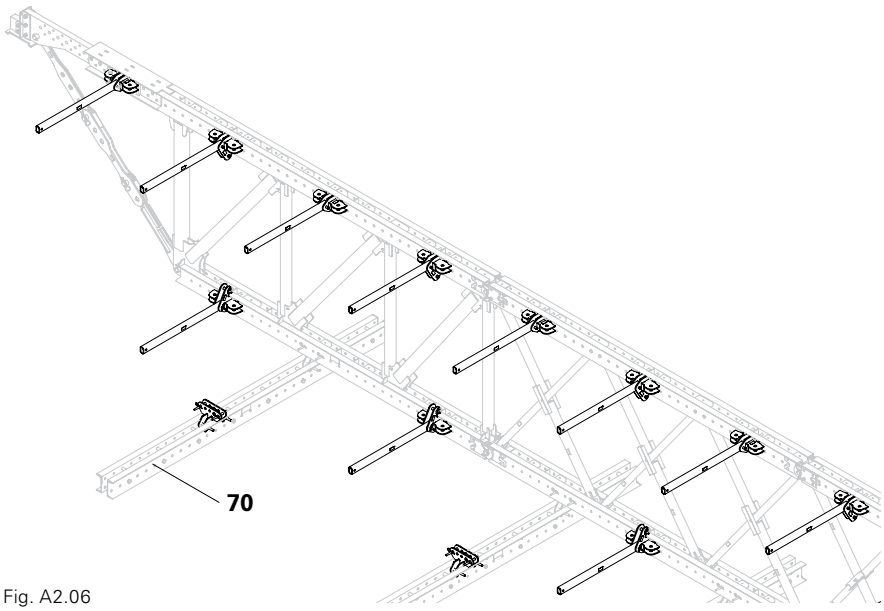

Fig. A2.06

Connecting Both Single Trusses

Components

40 Cotter Pin 4/1
43 Fitting Pin Ø 21 x 105 VRB

Assembly

1. Fix all pre-assembled Bracing Posts (6.1) to the second single truss using fitting pins (43) and secure with cotter pins (40). (Fig. A2.07)

For a better presentation, Fig. A2.07 ihas been rotated by 180°.

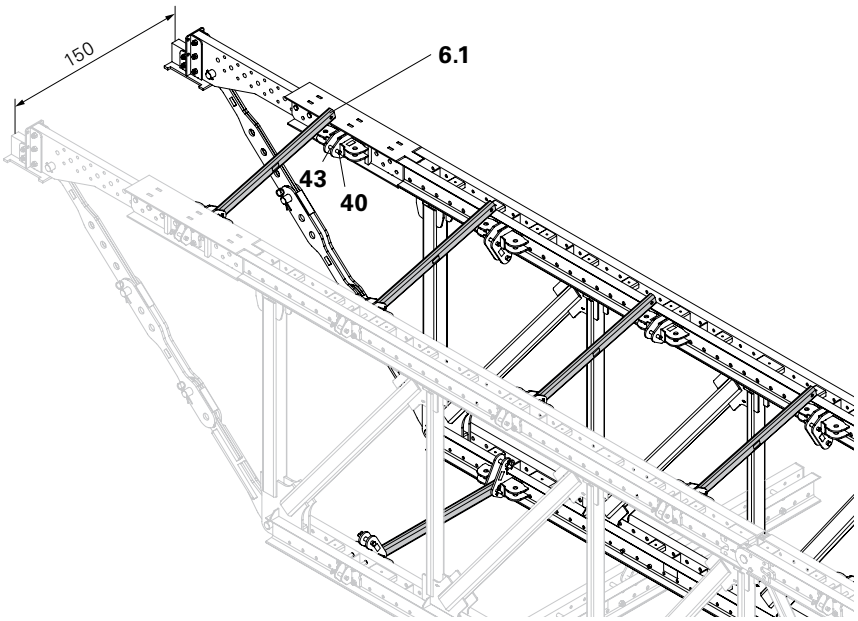

Fig. A2.07

Front view of the truss package assembly

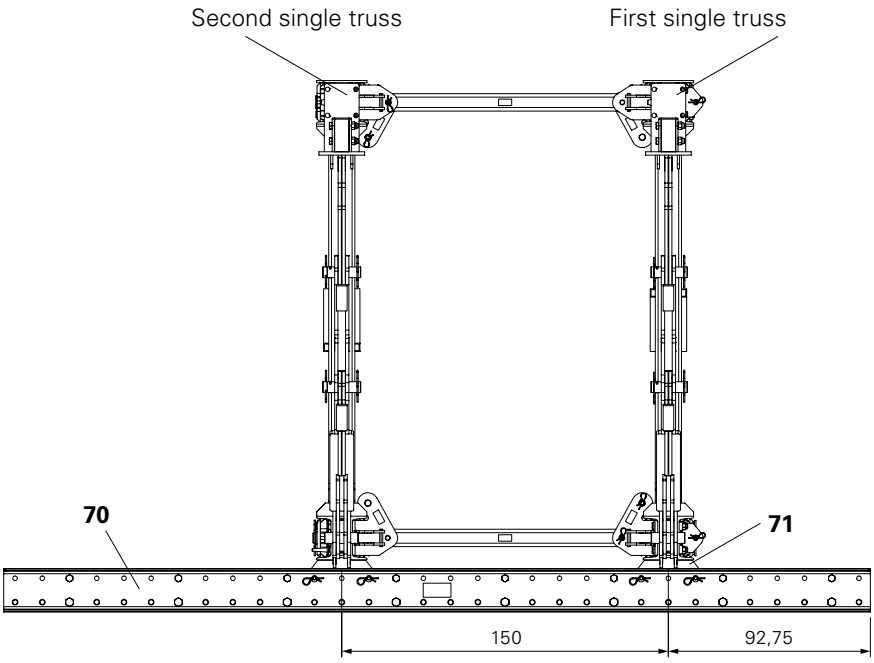

Fig. A2.08

Mounting the Bracing Traverse

Mount the Bracing Traverse at both ends of the truss package.

Components

30	Bracing Traverse 150 VRB
31	Bracing Traverse Connector VRB
32	Bracing Spindle VRB
40	Cotter Pin 4/1
45	Fitting Pin Ø 26 x 105 VRB

Assembly

1. Fix Bracing Spindle (32) to the Bearing Frame (2) using four bolts (32.2) and nuts (32.3). (Fig. A2.09)
2. Unscrew front nut (32.1).
3. Fix two Bracing Traverse Connectors (31) to the Bracing Traverse (30) with the bolts (45) and secure with cotter pins (40). (Fig. A2.10) The exact connection position is specified in the assembly plan.
4. Attach the assembled Bracing Traverse to the crane lifting gear using four straps.
5. Position the Bracing Traverse in front of the Bracing Spindle, and then slide on to the Bracing Spindle.
6. Secure the Bracing Traverse with the Nuts (32.1).

(Fig. A2.11)

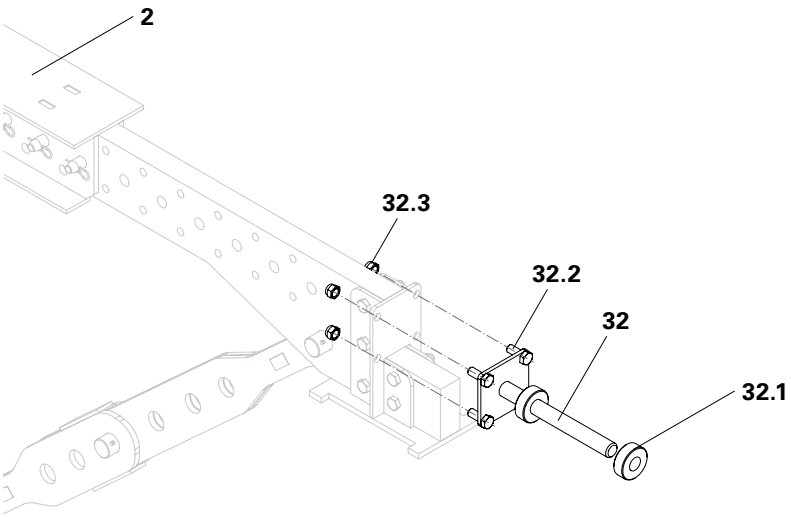

Fig. A2.09

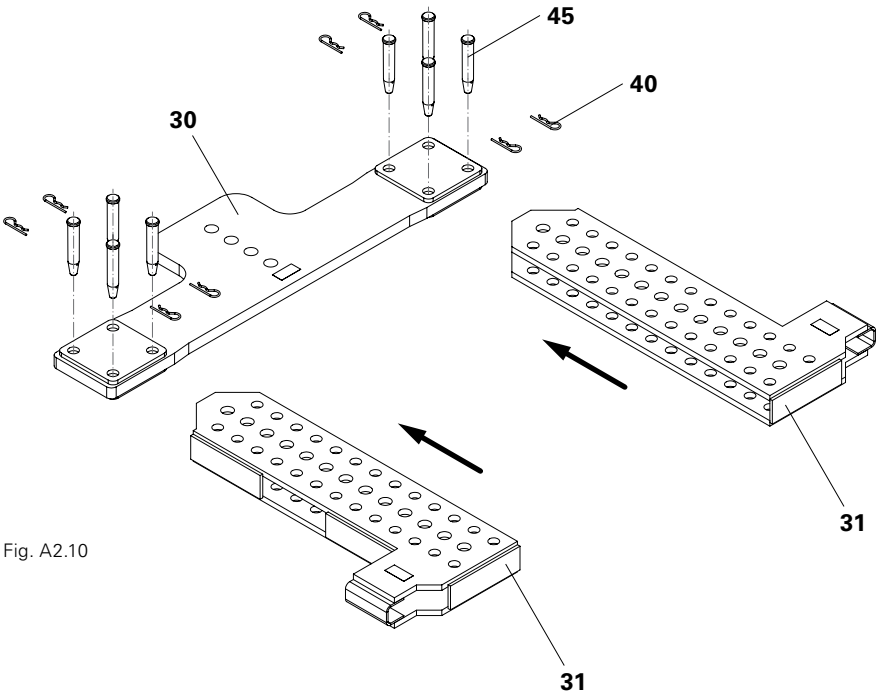

Fig. A2.10

For bridge crossing angles, adjust the Bracing Traverse and Telescopic Box. See Section “C3 Support Situation for Crossing Angle” on Page 50.

Mounting the Horizontal Bracing

Components

8	Eye Nut DW 20 VRB
9	Articulated Spanner DW 20 VRB
10	Tie Rod DW 20, Special Length
40	Cotter Pin 4/1
47	Fitting Pin Ø 30 VRB
61	Nut DW 20 SW 36/60

With a frame spacing of 150 cm, the tie rod has a length of 157 cm for the horizontal bracing.

Assembly of the eye nut

1. Screw the tie rod (10) into the eye nut (8). (Fig. A2.12)

Has the tie rod been completely screwed in the eye nut?

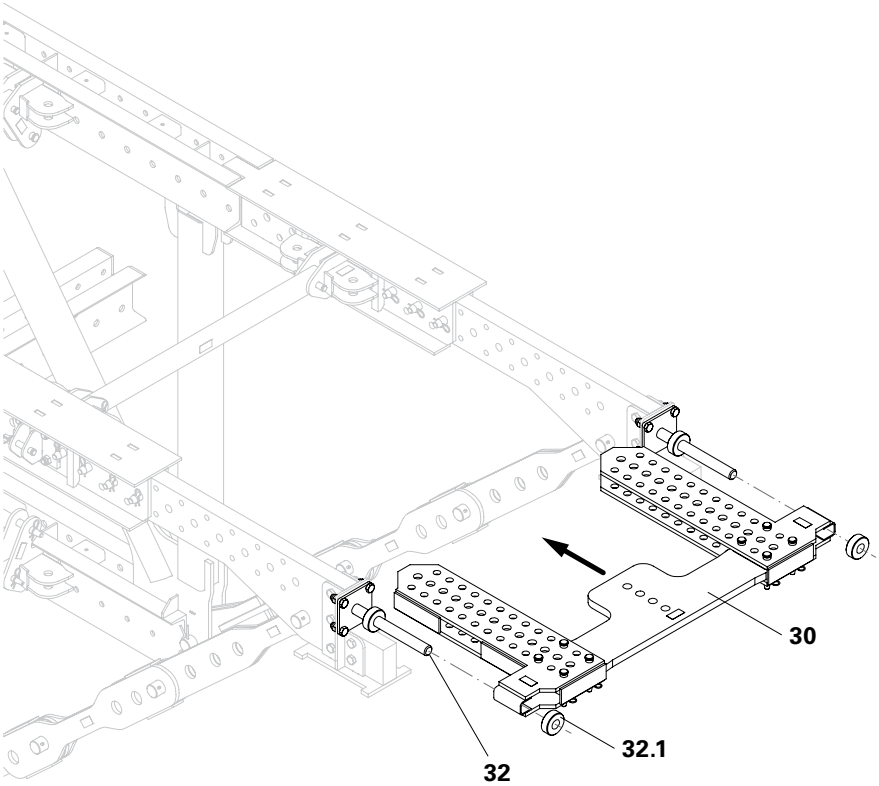

Fig. A2.11

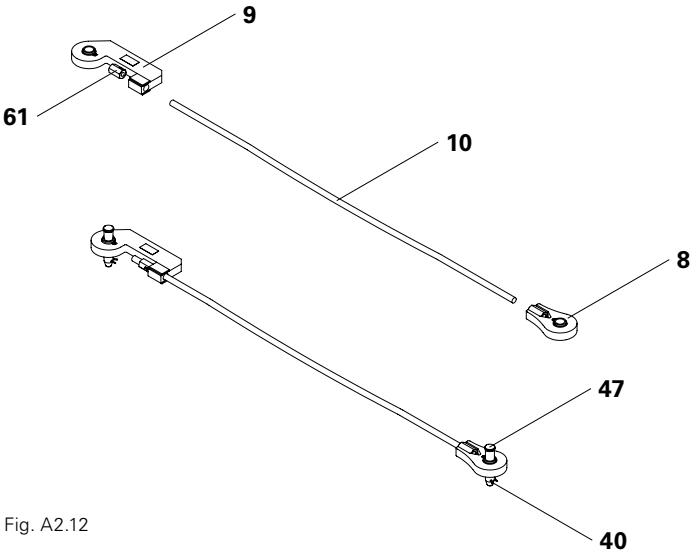

Fig. A2.12

Assembly of the Articulated Spanner

1. Insert the Articulated Spanner (9) into the Bracing Shoe horizontal connections (3), Vertical Bracing Shoes (4) and the Bracing Traverse connections (31). (Fig. A2.13)
2. Fix Articulated Spanner with bolts (47) and secure with cotter pins (40).

Assembly of the Tie Rod

1. Insert tie rod (10) into the Articulated Spanner.
2. Screw nut (61) onto the tie rod until it no longer protrudes.
3. Push the tie rod as far as possible into the Articulated Spanner.
4. Swivel eye nut (8) diagonally opposite into the Bracing Shoe (3) or Vertical Bracing Shoe (4). (Fig. A2.14)
5. Fix eye nut in position with bolts (47) and secure with cotter pins (40).
6. Tighten all nuts (61) on the Articulated Spanner (9) with a wrench and adjust the bracing struts so they are free of play. (Fig. A2.15)

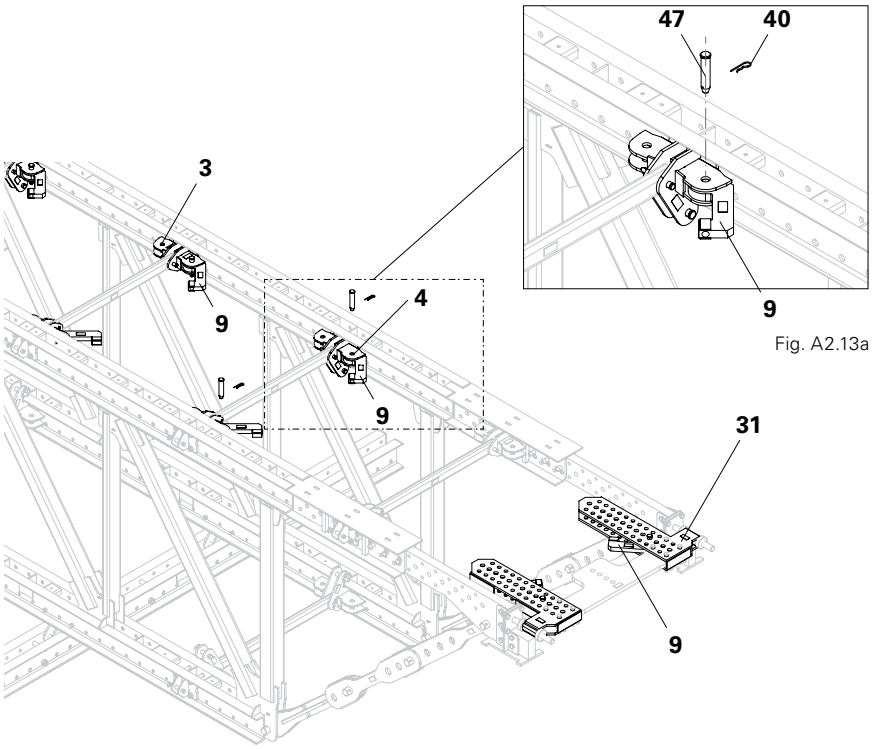

Fig. A2.13a

Fig. A2.13

The tie rod projection on the nut must be at least 10 mm.

- Have all connections been mounted on the Bracing Shoes and Vertical Bracing Shoes?
- Have all fitting pins been inserted and secured with cotter pins?
- Have all bracing struts been adjusted to ensure they are free of play?

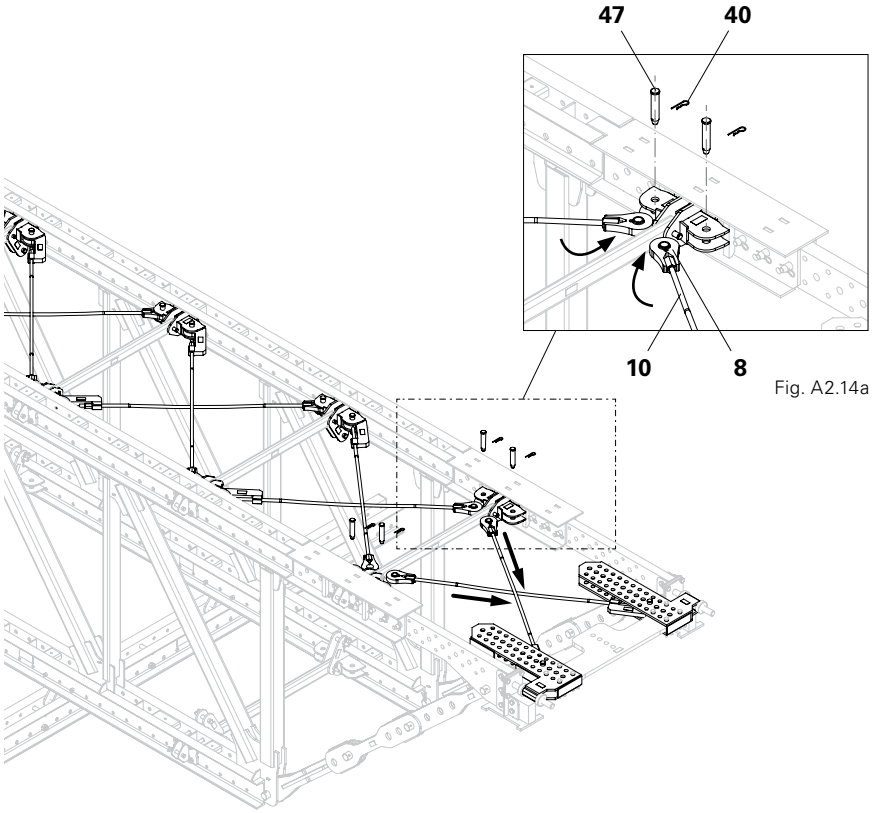

Fig. A2.14a

Fig. A2.14

Assembly on the Bearing Frame

- Always mount the Articulated Spanner as close as possible to the Bracing Traverse. Consider the individual position specified in the project planning.
- Individually adjust the tie rod to suit the bridge crossing angle and position of the Bracing Traverse. See Section “C3 Support Situation for Crossing Angle” on Page 50.

For a support situation with longitudinal or lateral inclinations, the nuts must not be play-free adjusted.In this case, only attach the nuts. See Section “C1 Support Situation for Longitudinal Inclinations” on Page 48 and Section “C2 Support Situation for Lateral Inclinations” on Page 49.

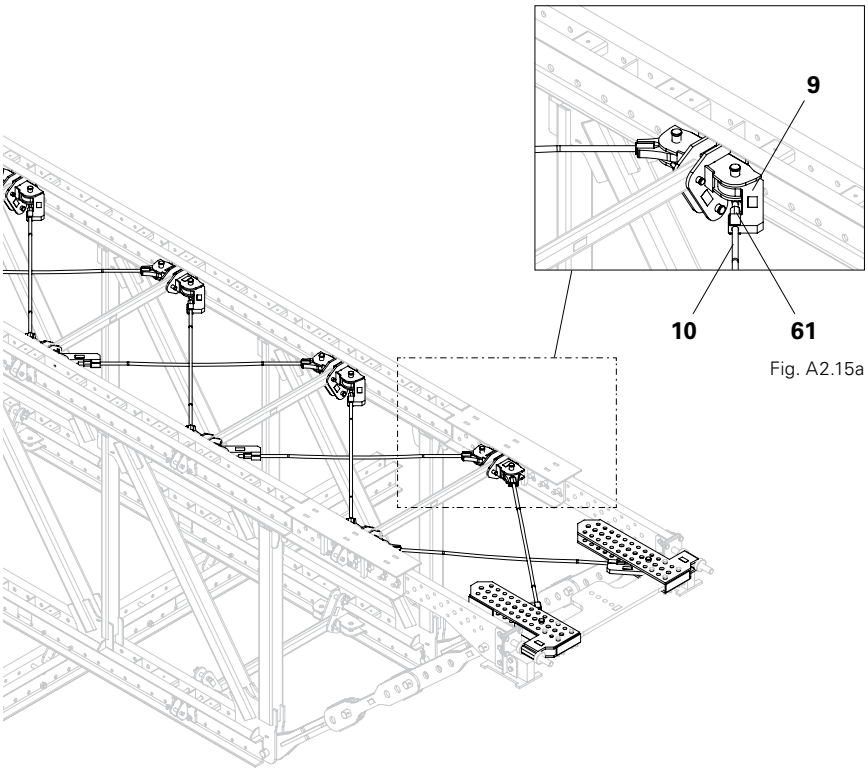

Fig. A2.15a

Fig. A2.15

Mounting the Vertical Bracing

Components

11	Eye Nut RCS DW 15
12	Articulated Spanner RCS DW 15
13	Tie Rod DW 15, Special Length
40	Cotter Pin 4/1
45	Fitting Pin Ø 26 x 105 VRB
60	Hex. Nut DW 15 SW 30/50

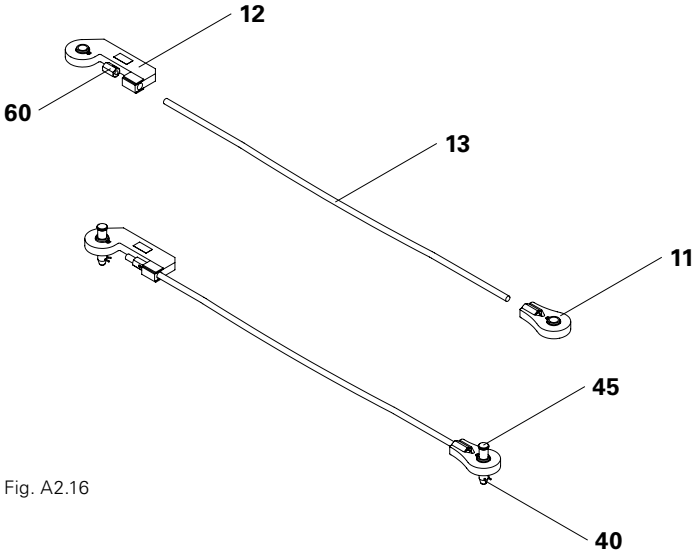

Fig. A2.16

With a frame spacing of 150 cm, the tie rod has a length of 195 cm for the vertical bracing.

Assembly of the eye nut

1. Screw tie rod (13) into the eye nut (11) (Fig. A2.16).

Has the tie rod been completely screwed in the eye nut?

Assembly of the Articulated Spanner

1. Insert the Articulated Spanner (12) into the vertical chord plates of the Vertical Bracing Shoes (4) in the top chord. (Fig. A2.17)
2. Fix Articulated Spanner with fitting pins (45) and secure with cotter pins (40).

Assembly of the tie rod

1. Insert tie rod (13) into the Articulated Spanner. (Fig. A2.18)
2. Screw nut (60) onto the tie rod until it no longer protrudes.
3. Push the tie rod as far as possible into the Articulated Spanner.

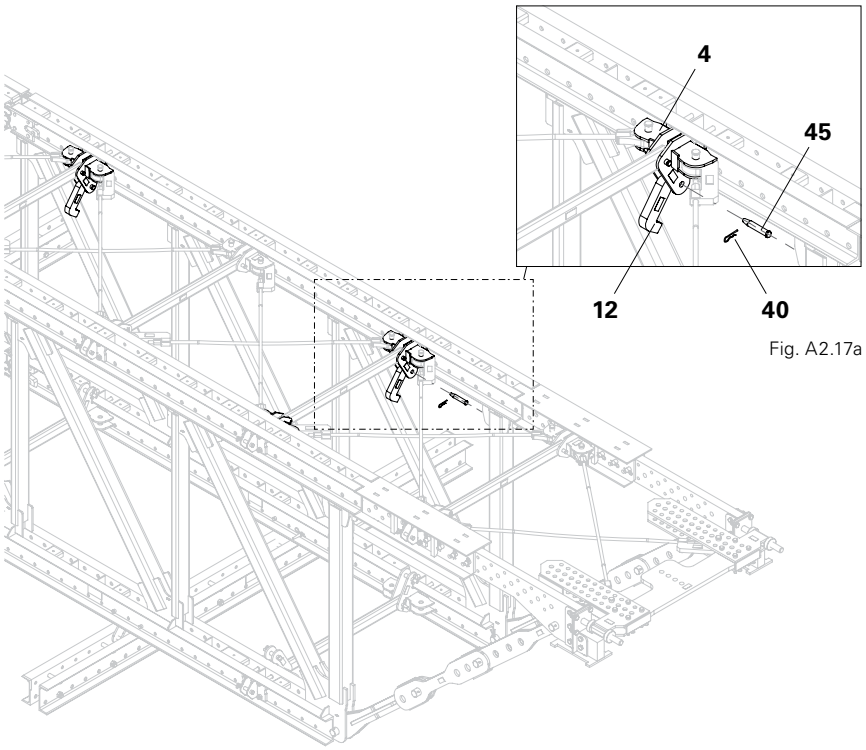

Fig. A2.17a

Fig. A2.17

4. Swivel eye nut (11) diagonally opposite into the Vertical Bracing Shoe (4) in the bottom chord.
5. Fix eye nut in position with bolts (45) and secure with cotter pins (40).
6. Tighten all nuts (60) on the Articulated Spanner with a wrench and adjust the bracing struts so they are free of play. (Fig. A2.19)

The tie rod projection on the nut must be at least 10 mm.

- Have all connections been mounted on the Vertical Bracing Shoes?
- Have all fitting pins been inserted and secured with cotter pins?
- Have all bracing struts been adjusted to ensure they are free of play?

For a support situation with longitudinal or lateral inclinations, the nuts must not be play-free adjusted.
In this case, only attach the nuts. See Section “C1 Support Situation for Longitudinal Inclinations” on Page 48 and Section “C2 Support Situation for Lateral Inclinations” on Page 49.

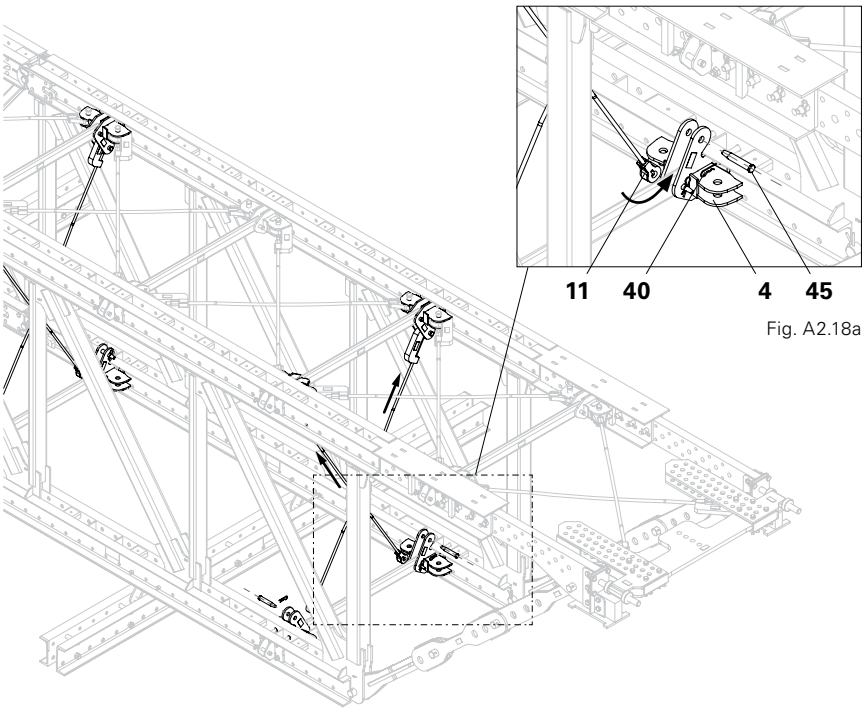

Fig. A2.18a

Fig. A2.18

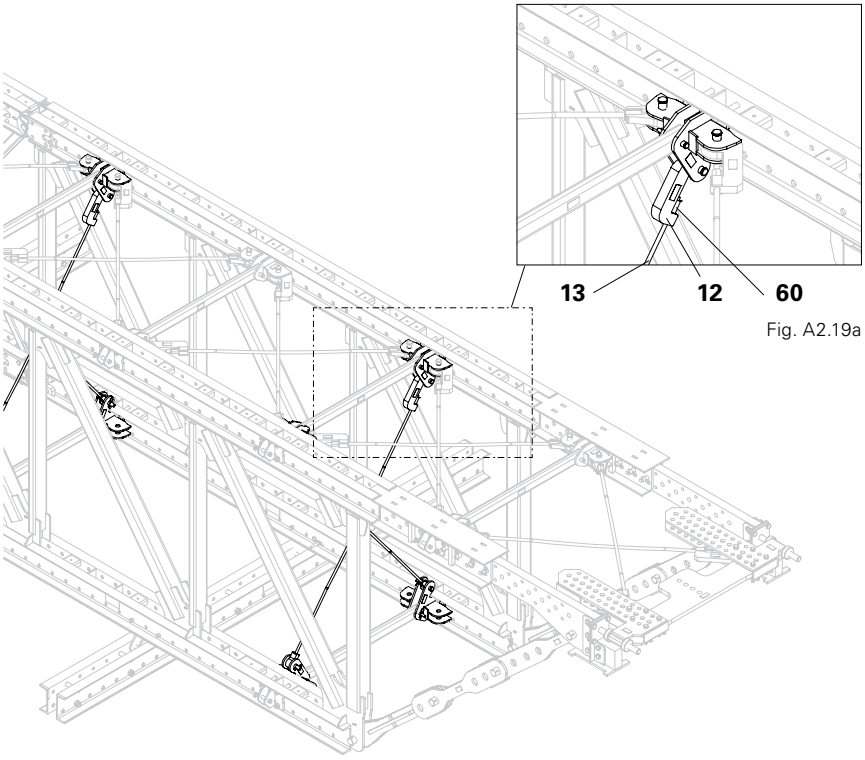

Fig. A2.19a

Fig. A2.19

Coupling with a Single Truss

Components

7	Coupling Posts
40	Cotter Pin 4/1
43	Fitting Pin Ø 21 x 105 VRB

This work step is omitted if no single truss is to be coupled to the truss package.
If a single truss is connected to this truss package, the Coupling Posts have already been mounted on the truss package. This facilitates on-site assembly of the package.

Pre-assembly
The Coupling Shoes (5) should already be mounted on the top and bottom chords. See Section "Connecting a Single Truss" on page 25.

Assembly
1. Fix Coupling Posts (7) to the Coupling Shoe (5) using fitting pins (43) and secure with cotter pins (40). (Fig. A2.20)

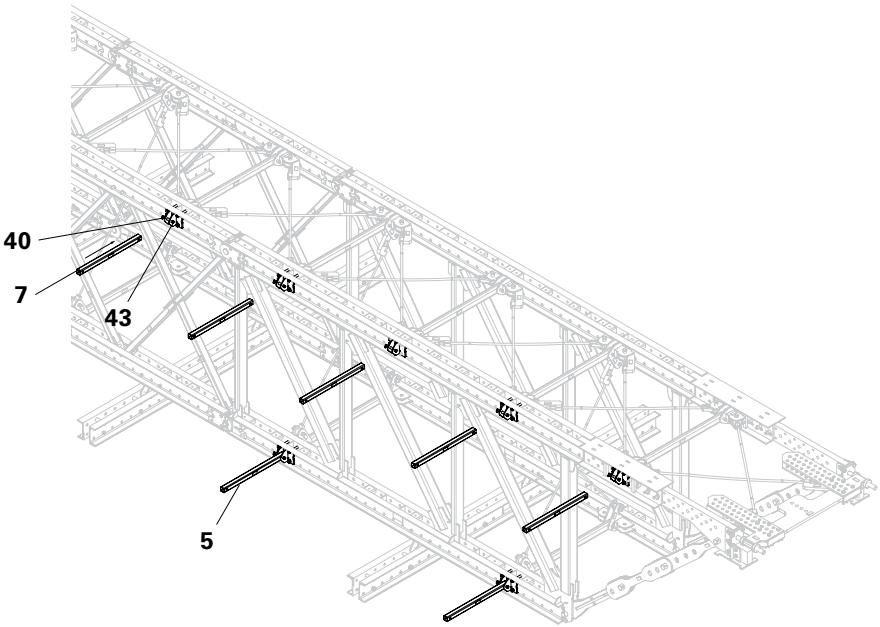

Fig. A2.20

Mounting the Coupling Shoes

Components

5	Coupling Shoe VRB
52	Bolt ISO 4014 M20 x 150-8.8
62	Nut ISO 7040 M20-8

Assembly with Bearing Frame 6.0 m VRB

1. Position Coupling Shoe (3) directly next to the fitting pin (47).
2. Fix with bolt (52) and nut (62).
3. Install Coupling Shoes in the top chord at spacings of 150 cm.
4. Mount Coupling Shoes (5) in the bottom chord in the same way. The spacing is 300 cm in each case.

(Fig. A3.01 + A3.03)

Assembly with Bearing Frame 5.25 m VRB

1. Position the Coupling Shoe (3) directly above the first vertical strut.
2. Further assembly corresponds to the Bearing Frame 6.0 m as of Step 2.

(Fig. A3.02 + A3.03)

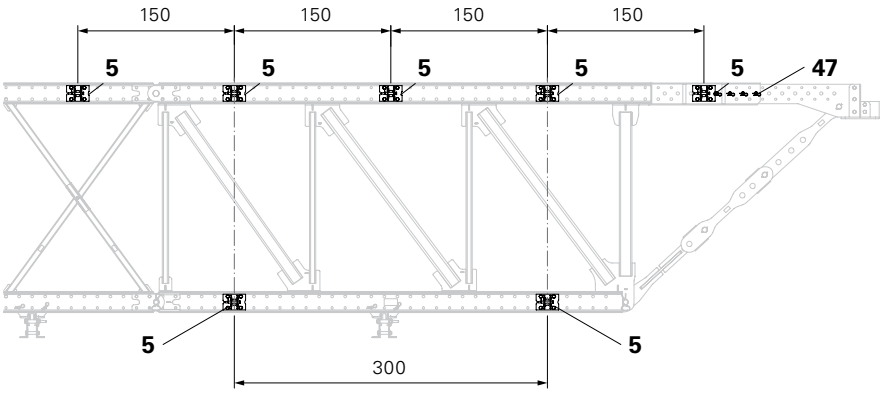

Fig. A3.01

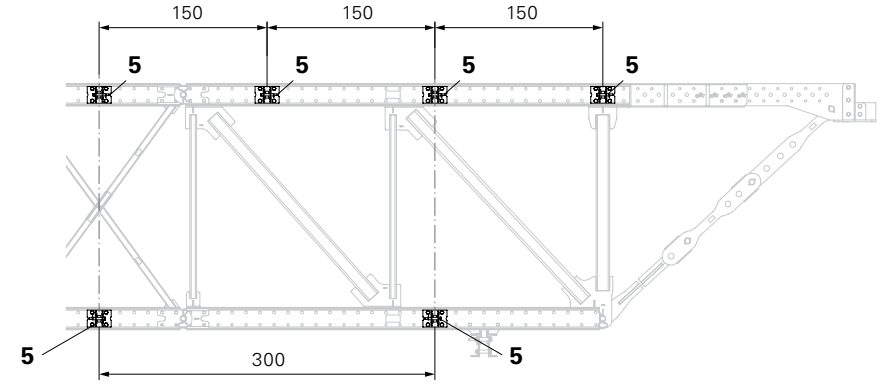

Fig. A3.02

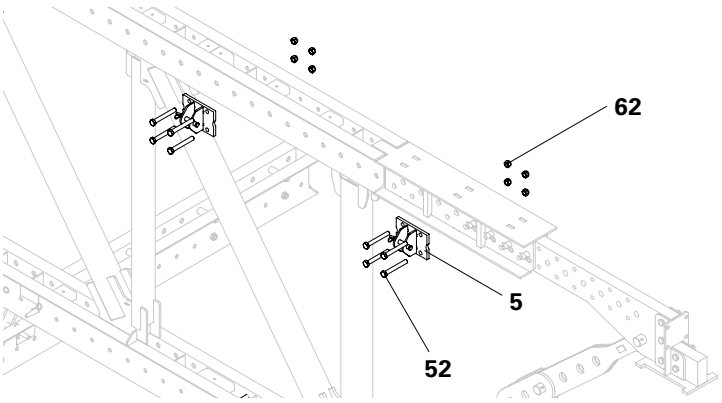

Fig. A3.03

When connecting a single truss or truss package

- When connecting a single truss or truss package, a Coupling Shoe (5) must likewise be mounted on the rear. Mount this together with the Coupling Shoe (5) of the front side. (Fig. A3.04)
- If a single truss or truss package is coupled to this single truss, the Coupling Posts (7) are mounted on the truss package. This facilitates on-site assembly of the package. (Fig. A3.05)

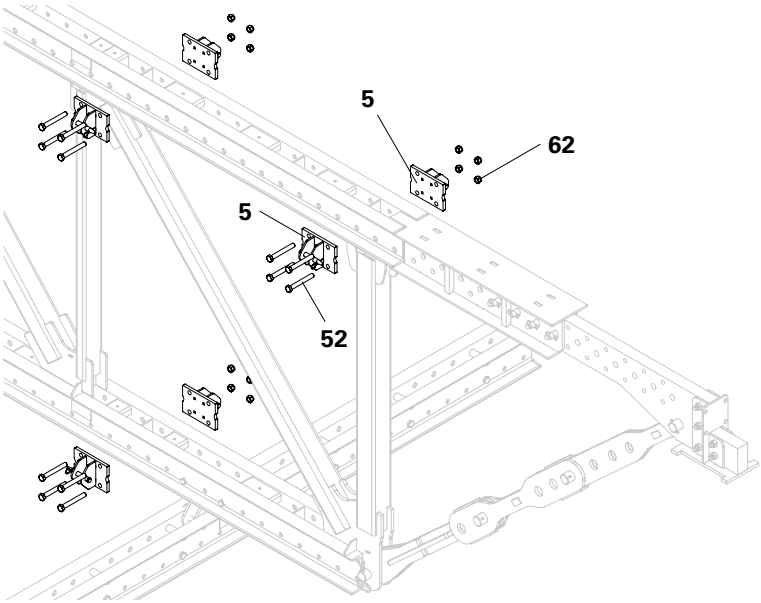

Fig. A3.04

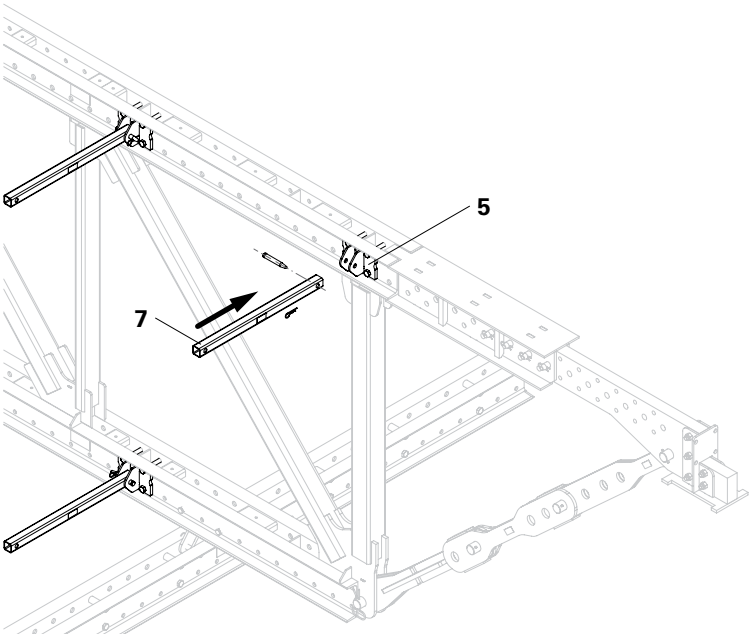

Fig. A3.05

Mounting the Horizontal Bearing

Components

23	Horizontal Bearing-2 VRB
35	Main Beam

Assembly

1. Centrally place the Horizontal Bearing (23) on the Main Beam (35) so that the holes of the Main Beam (35) and Horizontal Bearing (23) lie flush above each other.
2. Mount the Horizontal Bearing (23) on the Main Beam (35) with the four bolts (23.1) and nuts (23.8). (Fig. A4.01)
3. Secure the Horizontal Bearing (23) additionally with the clamps (23.2). (Fig. A4.02)

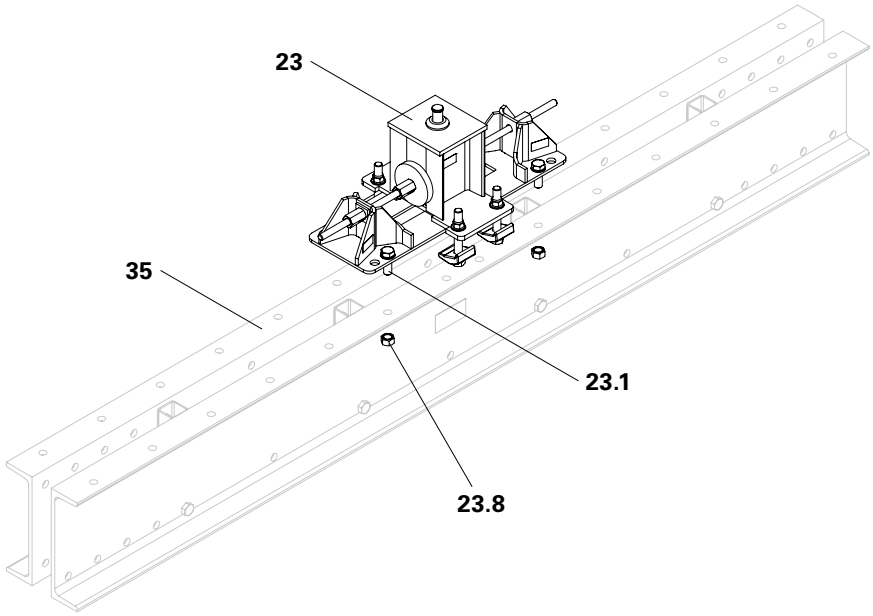

Fig. A4.01

Aligning the Horizontal Bearing

1. Loosen all hex. nuts (23.4).
2. Move the Horizontal Bearing (23) laterally until it is in the required position.
3. Align the tie rod (23.5). Ensure that the tie rod protrusion on the left and right is the same size.
4. Tighten both hex. nuts (23.4a).
5. Counter with the two hex. nuts (23.4b).

(Fig. A4.02)

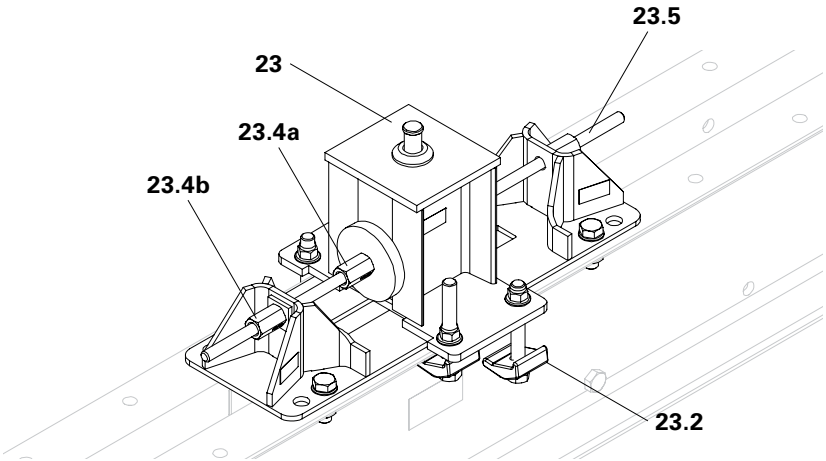

Fig. A4.02

- If a Cross Fall Bearing is required on the bearing in addition to the Longitudinal Bearing, see Section "Bearing with the Cross Fall Bearing" on Page 38.
- If a Cross Fall Bearing is not required on the bearing, see Section "Bearing without the Cross Fall Bearing" on Page 40.

Bearing with the Cross Fall Bearing

Components

23	Horizontal Bearing-2 VRB
24	Cross Fall Adapter VRB

Installing the Cross Fall Adapter
The Cross Fall Adapter (24) is required if a Cross Fall Bearing is installed on the bearing in addition to the Longitudinal Bearing. The Cross Fall Adapter evens out the resulting height difference on the Horizontal Bearing (23).

Assembly
1. Remove bolts (23.3) and clamps (23.2).
2. Loosen both hex. nuts (23.4) and screw out tie rod (23.5).
3. Lift the top part of the Horizontal Bearing (23).
4. Slide the Cross Fall Adapter (24) in between and position it so that the holes align with the top part of the Horizontal Bearing.

(Fig. A4.03)

5. Screw in the tie rod. Ensure that the tie rod protrusion on the left and right is the same size.
6. Tighten the Horizontal Bearing (23) with the clamps (23.2) and bolts (23.3).
7. Tighten nuts (23.4).

(Fig. 4.04)

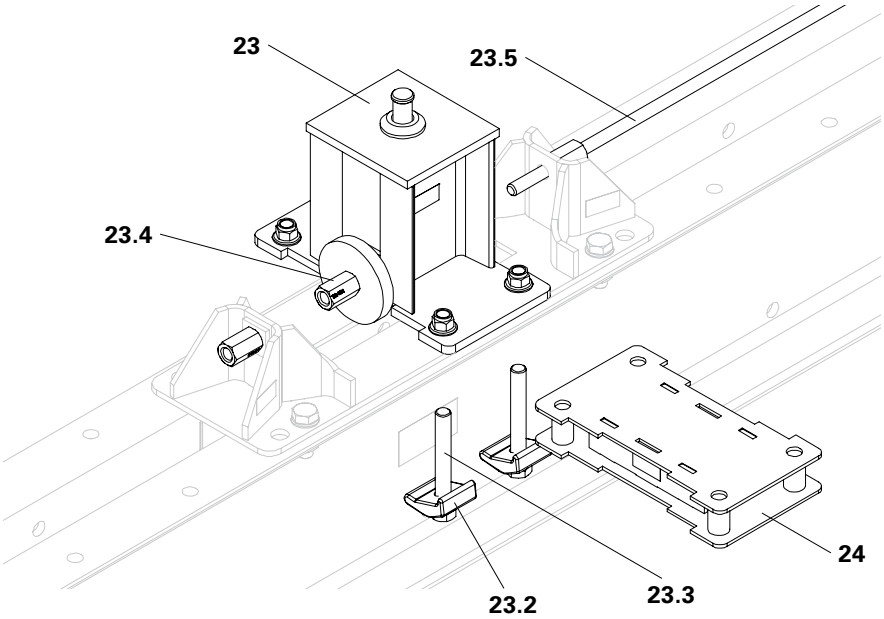

Fig. A4.03

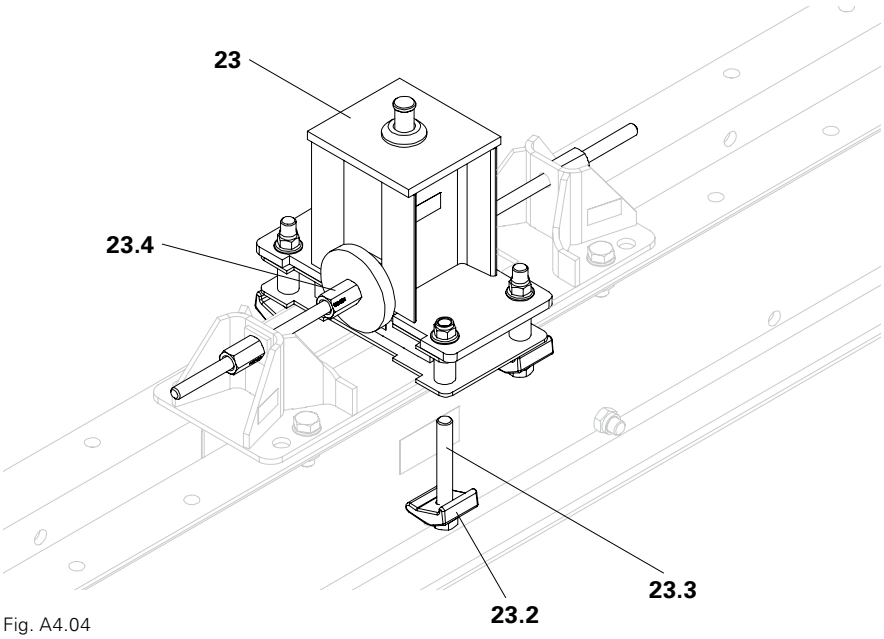

Fig. A4.04

Components

20	Centering Plate HDT-VRB
21	Cross Fall Bearing VRB
22	Longitudinal Bearing VRB
35	Main Beam

Installing the support for truss package 150 cm

For easier dismantling, apply lubricant under the Centering Plate (20).

Assembly

1. Place the Centering Plate (20) on the Main Beam (35). The spacing to the Horizontal Bearing (23) is centre - centre 75 cm.
2. Secure the Centering Plate with bolts (20.1).
3. Place the Cross Fall Bearing (21) on the Centering Plate.
4. Position the Longitudinal Bearing (22) on the Cross Fall Bearing.

(Fig. A4.05)

- Is the square centering aid of the Cross Fall Bearing correctly positioned in the square recess of the Centering Plate?
- Is the circular centering aid of the Longitudinal Bearing correctly positioned in the circular recess of the Cross Fall Bearing?

The spacing of both supports is 150 cm (Fig. A4.05).

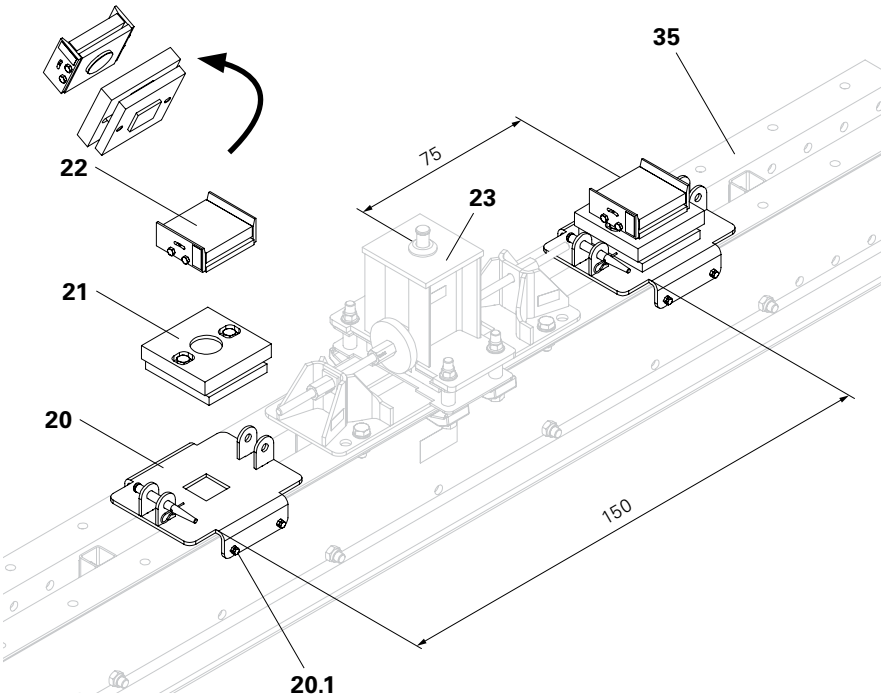

Fig. A4.05

Support without Cross Fall Bearing

Components

20	Centering Plate HDT-VRB
22	Longitudinal Bearing VRB
35	Main Beam

For easier dismantling, apply lubricant under the Centering Plate (20).

Assembly

1. Place the Centering Plate (20) on the Main Beam (35). The spacing to the Horizontal Bearing (23) is centre - centre 75 cm.
2. Secure the Centering Plate with bolts (20.1).
3. Place the Longitudinal Bearing (22) on the Centering Plate.

(Fig. A4.06)

Is the circular centering aid of the Longitudinal Bearing correctly positioned in the square recess of the Centering Plate?

The spacing of both supports is 150 cm (Fig. A4.06).

In the same way, accurately mount additional supports using the frame spacing dimensions of the truss package or single trusses on the Main Beam.

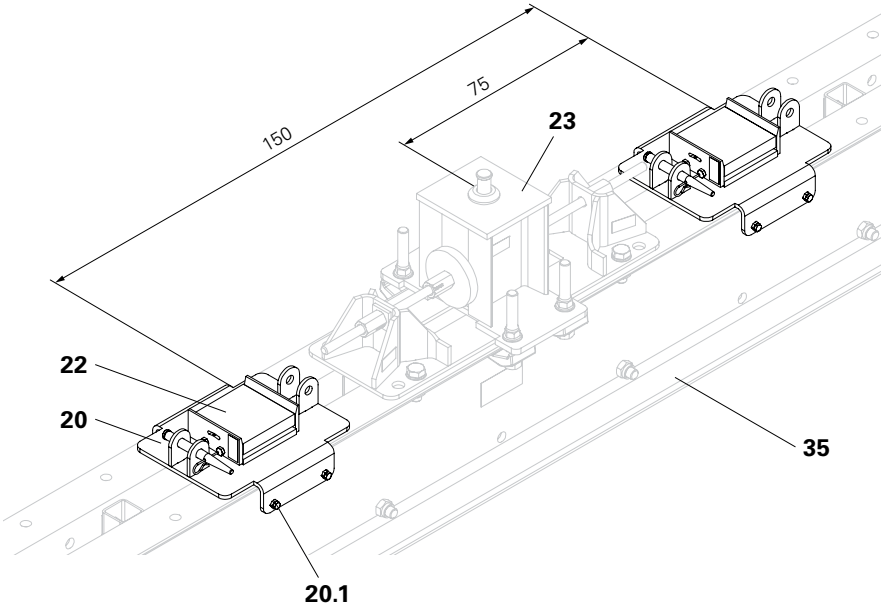

Fig. A4.06

Coupling the Main Beams

Components

35	Main Beam
36	Main Beam Connector VRB
41	Cotter Pin 5/1
46	Fitting Pin Ø 26 x 105 VRB

In order to extend the support area, several Main Beams can be coupled together.

Assembly

1. Mount the Main Beam Coupling (36) to the Main Beam (35a) using 8 fitting pins (46) and secure with cotter pins (41).

Warning

Risk of crushing through heavy moving parts!
Risk of hands being crushed when coupling the two Main Beams.
⇒ Do not take hold of anything between the components.

2. Push Main Beam (35b) together with Main Beam (35a).
3. Connect both Main Beams using 8 fitting pins and secure with cotter pins.

(Fig. A4.07)

Have all fitting pins been inserted and secured with cotter pins?

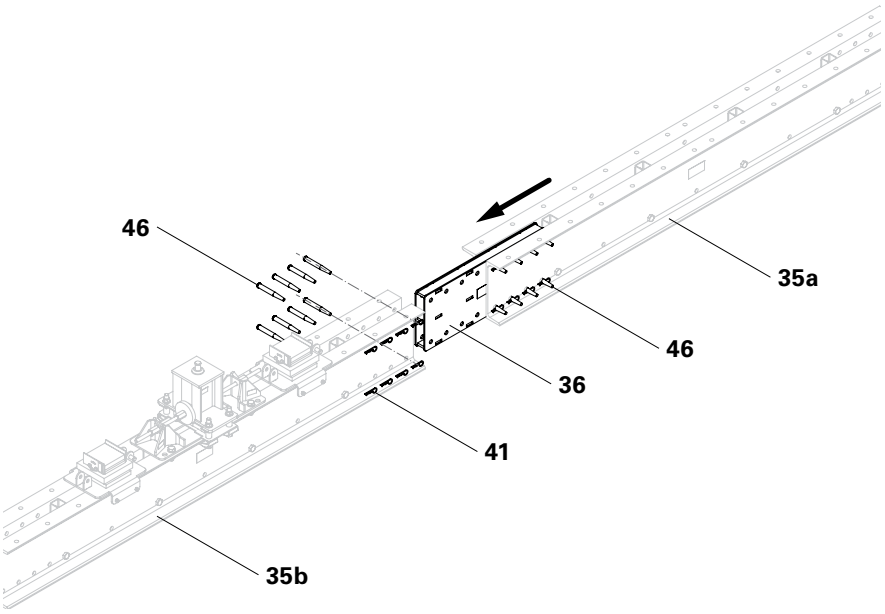

Fig. A4.07

B1 Assembly of Truss Package on the Main Beam

Danger

Heavy moving parts can fall down or overturn!
During assembly, there is a risk of hands and other body parts being crushed.

⇒ Leave the area of risk on the Main Beams.
⇒ Do not stand under suspended loads.
⇒ Use a guide rope when moving components.
⇒ Maintain an appropriate safety distance.
⇒ Do not stand between moving elements.

Attach PPE!

Take into account project-specific attachment positions on the truss package.

If the two Main Beams are not of the same height, the height difference must be evened out when transporting by crane. The truss package must be placed on both Main Beams at the same time with dimension x corresponding to dimension y. (Fig. B1.01a + Fig. B1.01b)
Determine the inclination by trial and error when attaching to the crane lifting gear.
If the truss package is positioned too early on one side, horizontal forces are created which can move or overturn the Main Beam. (Fig. B1.01)

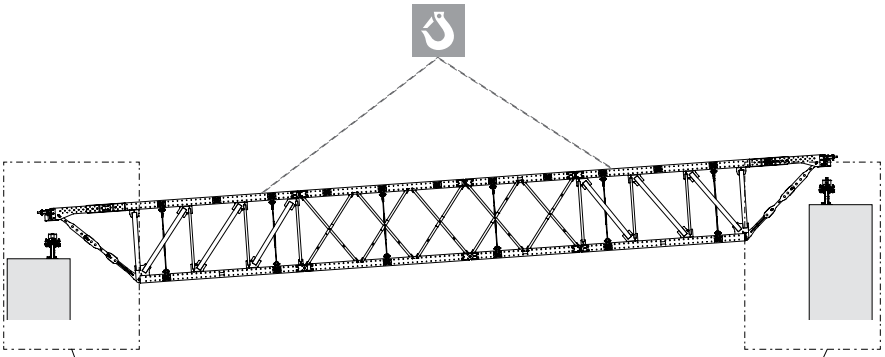

Fig. B1.01

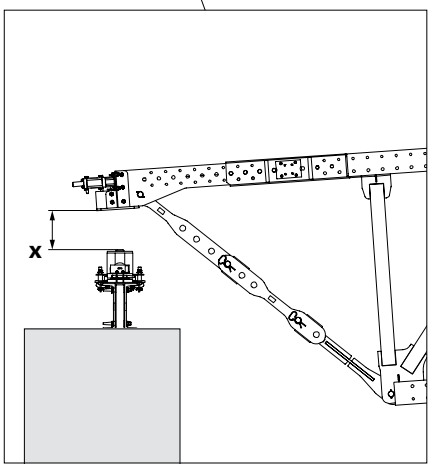

Fig. B1.01a

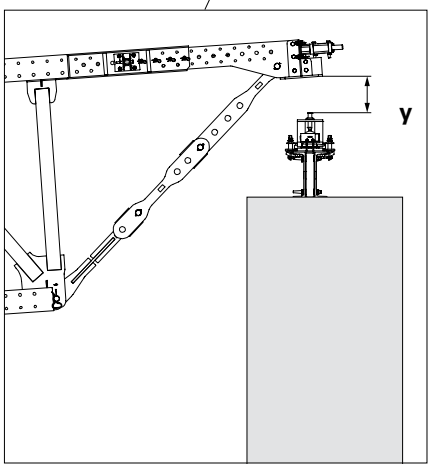

Fig. B1.01b

B1 Assembly of Truss Package on the Main Beam

Before transporting the truss package (Fig. B1.02) by crane, the PERI UP Flex system must be mounted on the truss package. See Section “D1 Assembly of PERI UP Flex” on Page 52.

Attach PPE!

Assembly

1. Remove cotter pins (23.7) and pull bolts out of the Horizontal Bearing (23).
2. Attach truss package using suitable load-carrying means.
3. Loosen the connection between the truss package and assembly aids (Climbing Rails). For this, remove cotter pins and pull out fitting pins.
4. Crane in the truss package and position above the Main Beams (35).
5. Slowly lower the truss package and place the Bearing Frames (2) on the Longitudinal Bearings (22).
6. Insert the bolt (23.6) through the designated hole on one side of the truss package and connect the Bracing Traverse (30) to the Horizontal Bearing (23).
7. Secure bolts (23.6) with cotter pins (23.7).

(Fig. B1.03)

8. Repeat Steps 5 to 7 on the other side of the truss package.

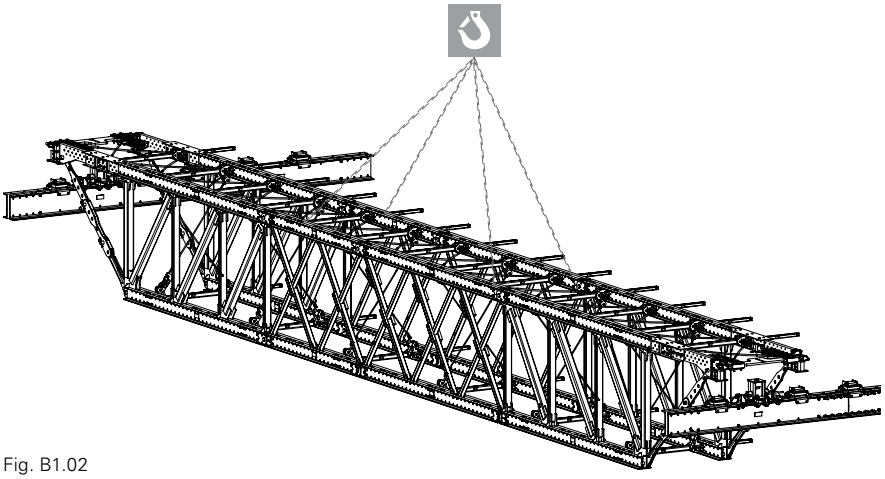

Fig. B1.02

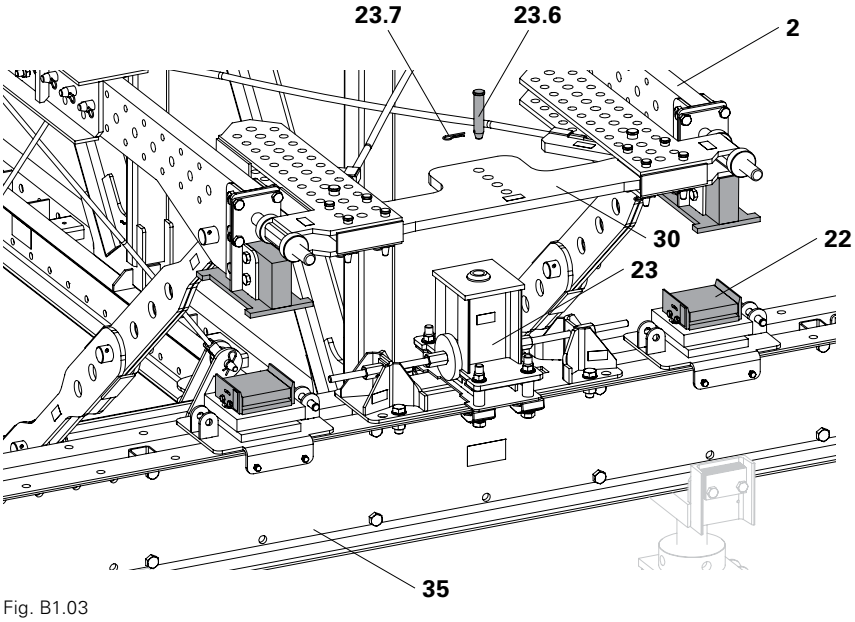

Fig. B1.03

If the holes in the Bracing Traverse (30) and Horizontal Bearing (23) are not aligned, the position of the Bracing Traverse must be adjusted. (Fig. B1.04)

Adjusting the Bracing Traverse

1. Loosen tie rod (10) on the Articulated Spanner (9).
2. Loosen nuts (32.1).
3. Adjust the Bracing Traverse (30) so that one of the holes is aligned with the hole in the Horizontal Bearing (23).
4. Insert the bolt (23.6) through the designated hole and connect the Bracing Traverse to the Horizontal Bearing (23).
5. Secure bolts (23.6) with cotter pins (23.7).
6. Tighten nuts (32.1).
7. Adjust the tie rod (10) on the Articulated Spanner (9) so that it is free of any play.

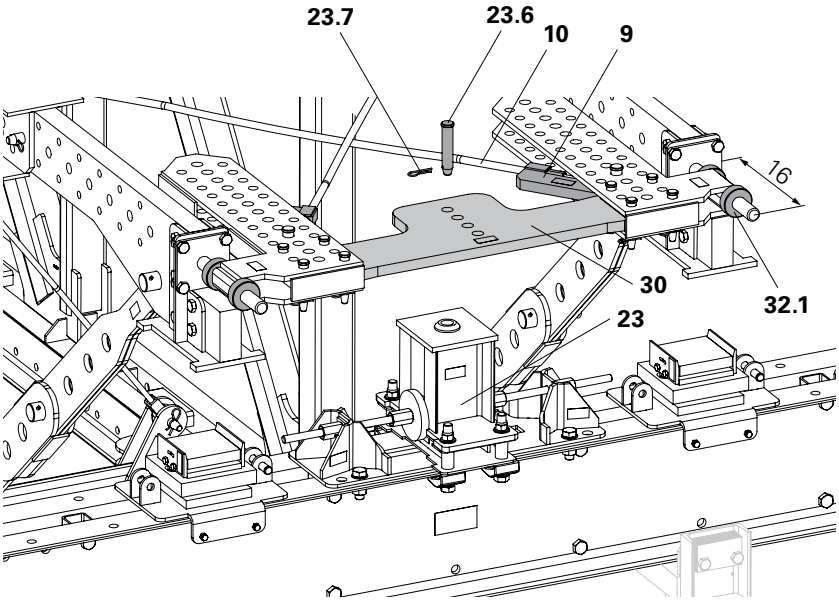

Fig. B1.04

- The Bearing Frame has a 29-cm-long recess. This allows longitudinal adjustment of the truss package by up to 13 cm. (Fig. B1.05 + Fig. B1.06)
- If the Horizontal Bearing (23) has to be laterally moved to achieve the exact position, see "Aligning the Horizontal Bearing" on Page 37.

Does the Bearing Frame completely lie in the Longitudinal Bearing?
(Fig. B1.06)

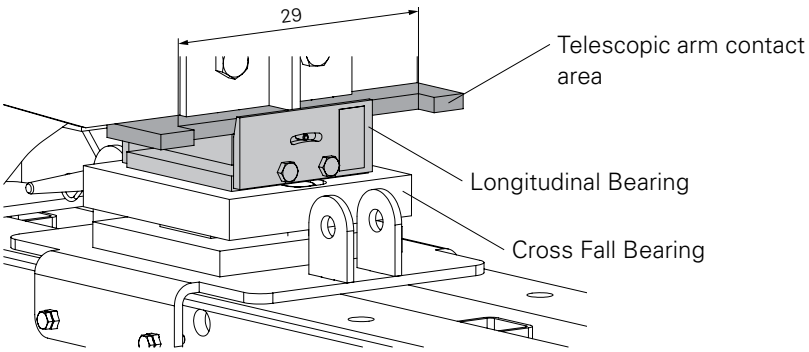

Fig. B1.05

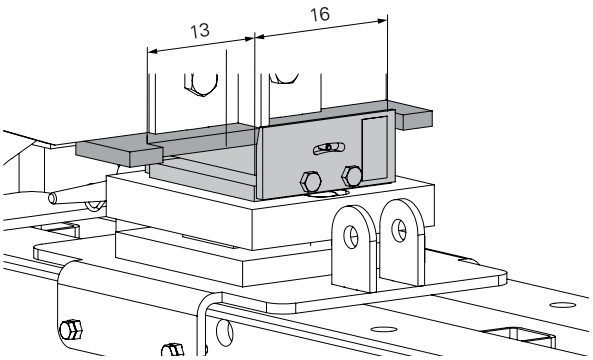

Fig. B1.06

Danger

Heavy moving parts can fall down or overturn!
During assembly, there is a risk of hands and other body parts being crushed.

⇒ Leave the area of risk on the Main Beams.
⇒ Do not stand under suspended loads.
⇒ Use a guide rope when moving components.
⇒ Maintain an appropriate safety distance.
⇒ Do not stand between moving elements.

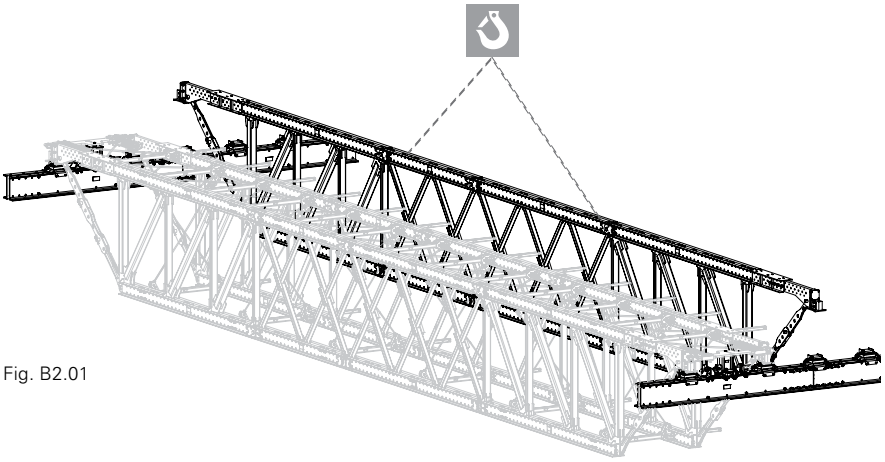

Fig. B2.01

Attach PPE!

Take into account project-specific attachment positions on the single truss.

Assembly

1. Attach single truss using suitable load-carrying means.
2. Raise the crane lifting gear until it is tensioned.
3. Loosen the connection between the single truss and assembly aids (Climbing Rail). For this, remove cotter pins and pull out fitting pins.
4. Crane in the single truss and position above the Main Beams (35). (Fig. B2.01)
5. Slowly lower the single truss and place the Bearing Frames (2) on the Longitudinal Bearings (22). (Fig. B2.02)

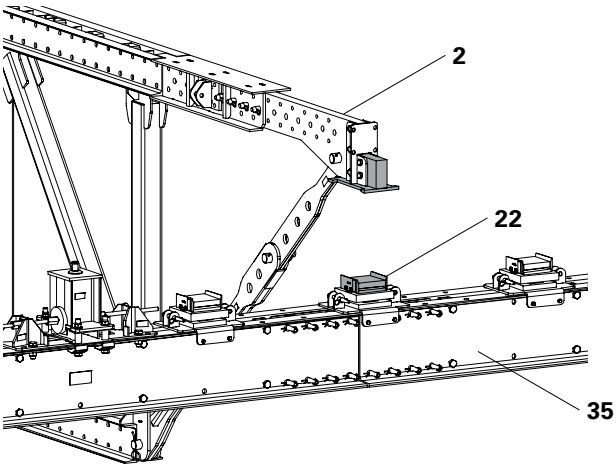

Fig. B2.02

Does the Bearing Frame completely lie in the Longitudinal Bearing?
(Fig. B1.06)

- The Coupling Posts (7) have already been mounted on the truss package.
- The Coupling Shoes (5) have already been mounted on the single truss.

See Section “Coupling with a Single Truss” on Page 34.

Attach PPE!

Assembly

1. Fold Coupling Posts (7) upwards. (Fig. B3.01)
2. Connect all Coupling Posts (7) in the top and bottom chords to the Coupling Shoe (5).
3. Insert fitting pins (43) and secure with cotter pins (40).

- Have all Coupling Posts been mounted?
- Have all fitting pins been inserted and secured with cotter pins?

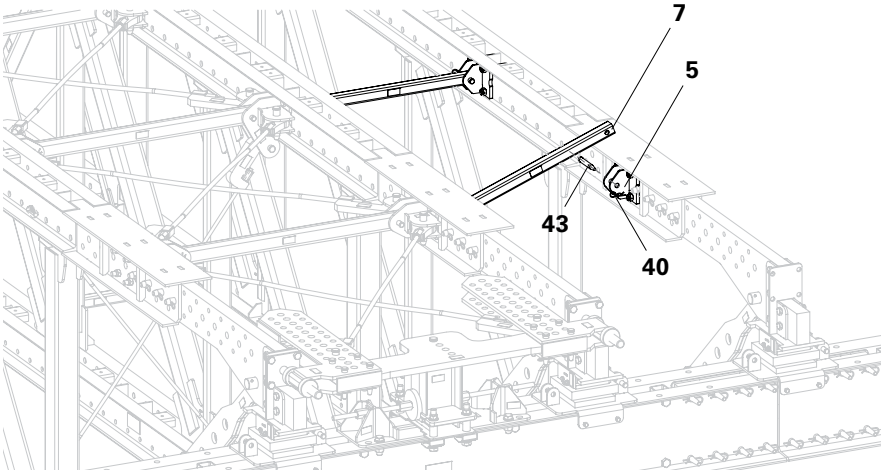

Fig. B3.01

Notes

C1 Support Situation for Longitudinal Inclinations

The Longitudinal Bearing evens out any height difference between the supports. This is possible up to an angle of 4°. (Fig. C1.01)

!

The longitudinal inclination between the supports may not exceed an angle of 4° which corresponds to a gradient of 7 %.

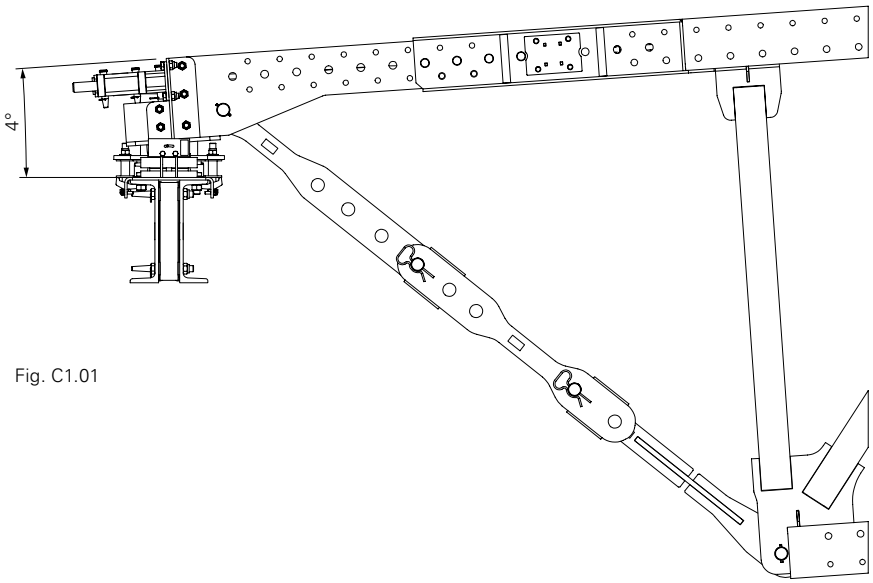

Fig. C1.01

C2 Support Situation for Lateral Inclinations

The Cross Fall Bearing evens out an inclination of the Main Beam. This is possible up to an angle of 4°.
The frame remains in a vertical position in spite of the lateral inclination.

The lateral inclination of the Main Beam may not exceed an angle of 4°. This corresponds to a gradient of 7 %.

- The tie rods of the horizontal and vertical bracing must have correspondingly adapted lengths for accommodating lateral inclinations.
- The tie rod projection on the nut must be at least 10 mm.

The truss package must be vertically aligned when placed on the Main Beam. For this, the tie rods (10) and (13) of the horizontal and vertical bracing must have sufficient play.

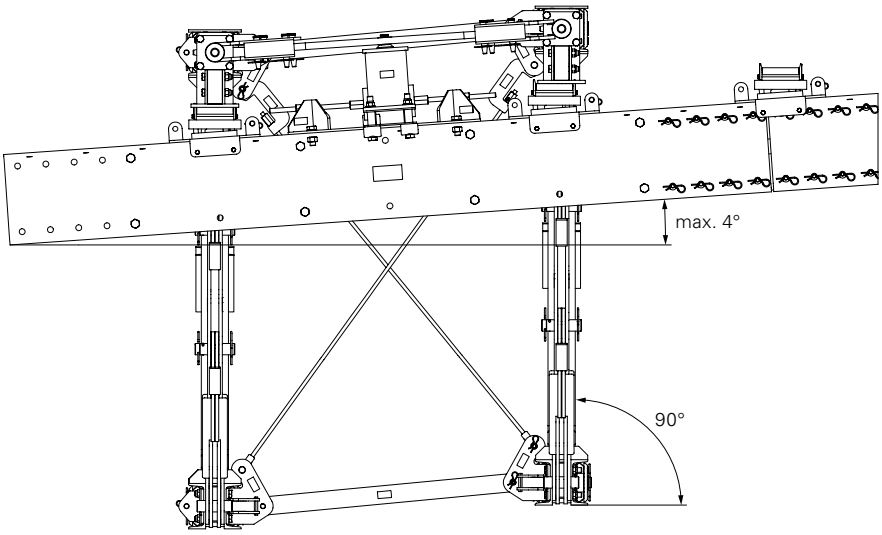

Fig. C2.01

Assembly

1. Loosen all nuts (61) of the horizontal bracing on the Articulated Spanner (9).
2. Loosen all nuts (60) of the vertical bracing on the Articulated Spanner (12).
3. Crane in the truss package and position on the Main Beam.
4. Adjust all tie rods (10) of the horizontal bracing using the nuts (61) on the Articulated Spanner (9) so they are free of play.
5. Adjust all tie rods (10) of the vertical bracing using the nuts (60) on the Articulated Spanner (12) so they are free of play.

(Fig. C2.02)

See “Mounting the Horizontal Bracing” on Page 29 and “Mounting the Vertical Bracing” on Page 32.

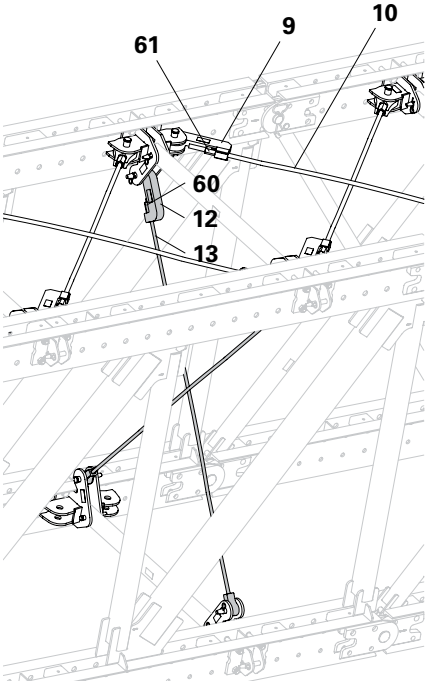

Fig. C2.02

Depending on the project, the support angle between the truss package and the Main Beam is not always 90°. In these cases, the crossing angle between the truss package and Main Beam can be continuously adjusted between 63.4° and 90°.

- The following working steps describe in general which activities have to be carried out.
- Fig. C3.01 and C3.02 serve as examples.
- The exact assembly position of some components can differ from the illustration due to specific project requirements.
- Details provided in the assembly drawings are binding.

Crossing Angle from 67.4° to 90°

Assembly

1. Extend the Bearing Frame (2). (Fig. C3.01)
2. Mount the Bracing Traverse (30).
3. Adjust the Bracing Traverse with the help of the bracing spindles (32). One of the four holes must be centered on the connecting line of the two bracing spindles. Here in the example: Hole No. 2 (Fig. C3.01a)
4. Mount the Articulated Spanner (9). For this, insert the bolts (47) into the first possible hole and secure with a cotter pin.
5. Adjust the tie rod (10) so that it is free of any play.

⇒ The four fitting pins (47) must be mounted in the four outer holes of the telescopic arm guide (2.5).
⇒ Also when fully extended, all four fitting pins (47) must be securely mounted. See " Adjusting the Bearing Frame" on Page 21.
⇒ The telescopic arm (2.4) must always be fixed with all four fitting pins (47).
⇒ The Bracing Traverse (30) must always be mounted with all bolts (45) on the Bracing Frame connection (31).

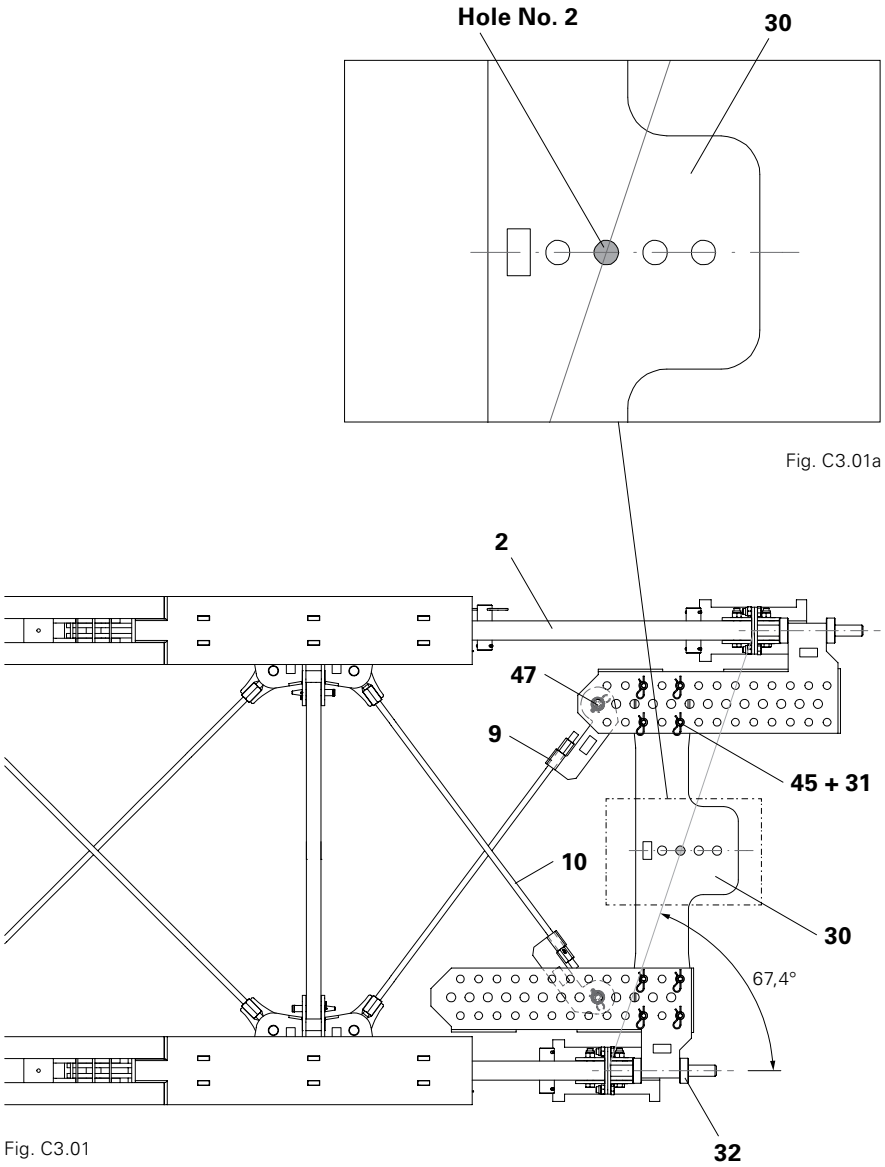

Fig. C3.01a

Fig. C3.01

Crossing Angle from 63.4° to 67.4°

Here, the Bracing Traverse connector is turned on the shorter side of the Telescopic Box. This is necessary in order to be able to connect the Bracing Traverse.

Assembly

1. Extend the Bearing Frame (2). (Fig. C3.02)
2. Mount the Bracing Traverse (30).
3. Adjust the Bracing Traverse (30) with the help of the bracing spindles (32). One of the four holes must be centered on the connecting line of the two bracing spindles. Here in the example: Hole No. 3 (Fig. C3.02a)
4. Mount the Articulated Spanner (9). For this, insert the bolts (47) into the first possible hole and secure with a cotter pin.
5. Adjust the tie rod (10) so that it is free of any play.

If additional single trusses are connected for strong crossing angles, project-specific alternative solutions are required.

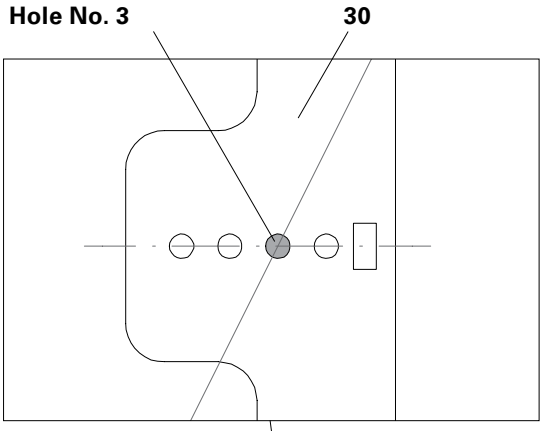

Fig. C3.02a

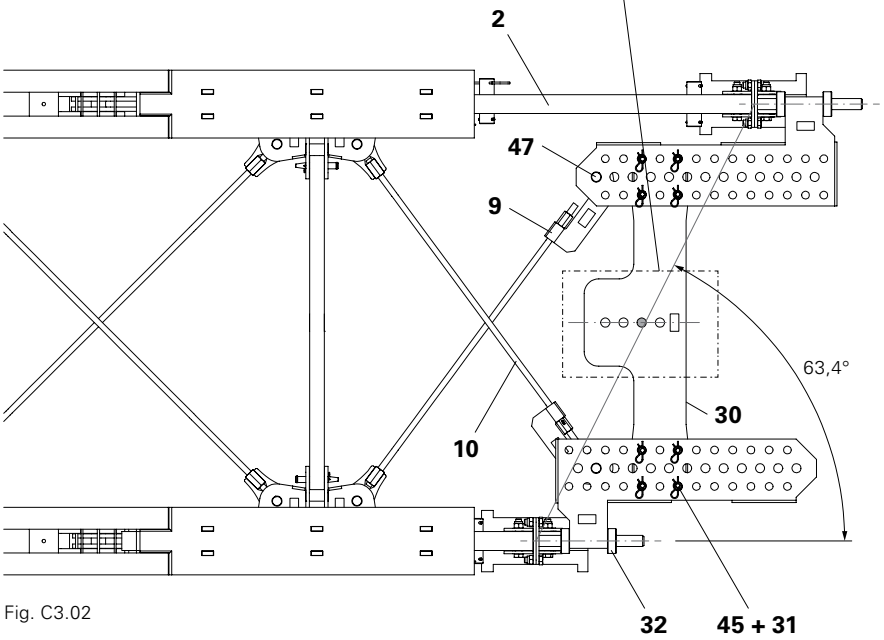

Fig. C3.02

Connection Assembly

Components

41	Cotter Pin 5/1
46	Fitting Pin Ø 26 x 120
80	Connector UP-VRB

- This step is carried out together with the assembly of the bracing connections. See “Mounting the Bracing Connections” on Page 24.
- The assembly of Connector UP-VRB takes place on the inner side of the truss package.

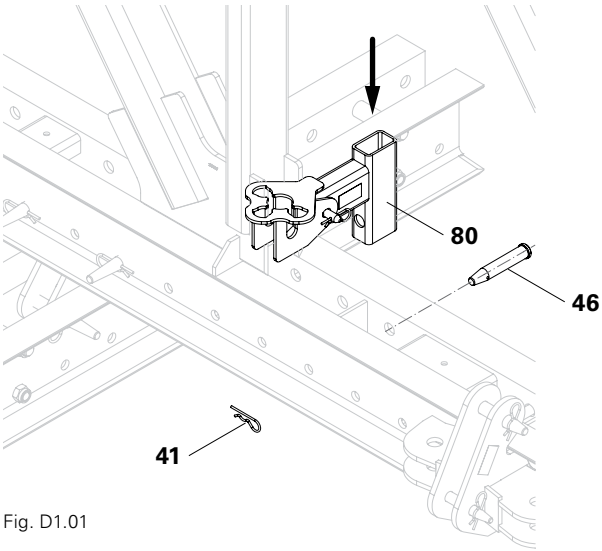

Fig. D1.01

Assembly

1. At a distance of 115.8 cm, insert the Connector UP-VRB (80) between the two guardrails of the bottom chord. (Fig. D1.01)
2. Fit bolts (46) and secure with cotter pins (41).
3. Fit additional Connectors (80) at a distance of 300 cm. (Fig. D1.02)

Depending on the project, the distances can be changed especially in the area of the supports.

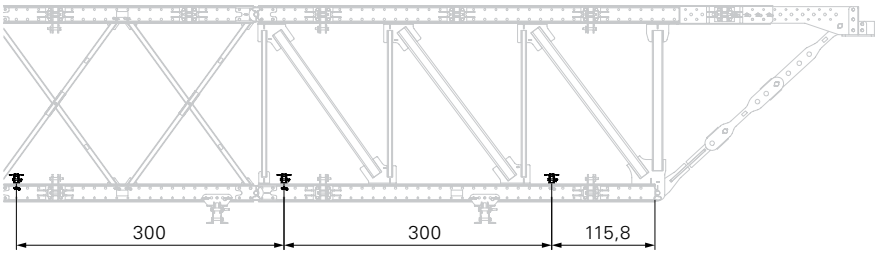

Fig. D1.02

Assembly in the Truss Package

Components

90 Top Standard UVH 150
92 Ledger UH 100 Plus
93 Ledger UH 300 Plus
94 Steel Deck UDG 25 x 300

This step is carried out after the horizontal and vertical bracing has been installed. See “Mounting the Horizontal Bracing” on Page 29 and “Mounting the Vertical Bracing” on Page 32.

- The permissible live load is 75 kg/m².
- Firmly secure the wedge of the ledger by means of a 500-g hammer.
- Lock the steel decking using the integrated protection against lifting.

Assembly

1. Insert the Top Standard (90) with the long tube protrusion into the Connector (80). Ensure that the rosettes are flush with each other.
2. Hook the ledger (93) into the lower rosettes on both sides. The ledger (93) is positioned parallel to the truss package.

(Fig. D1.04)

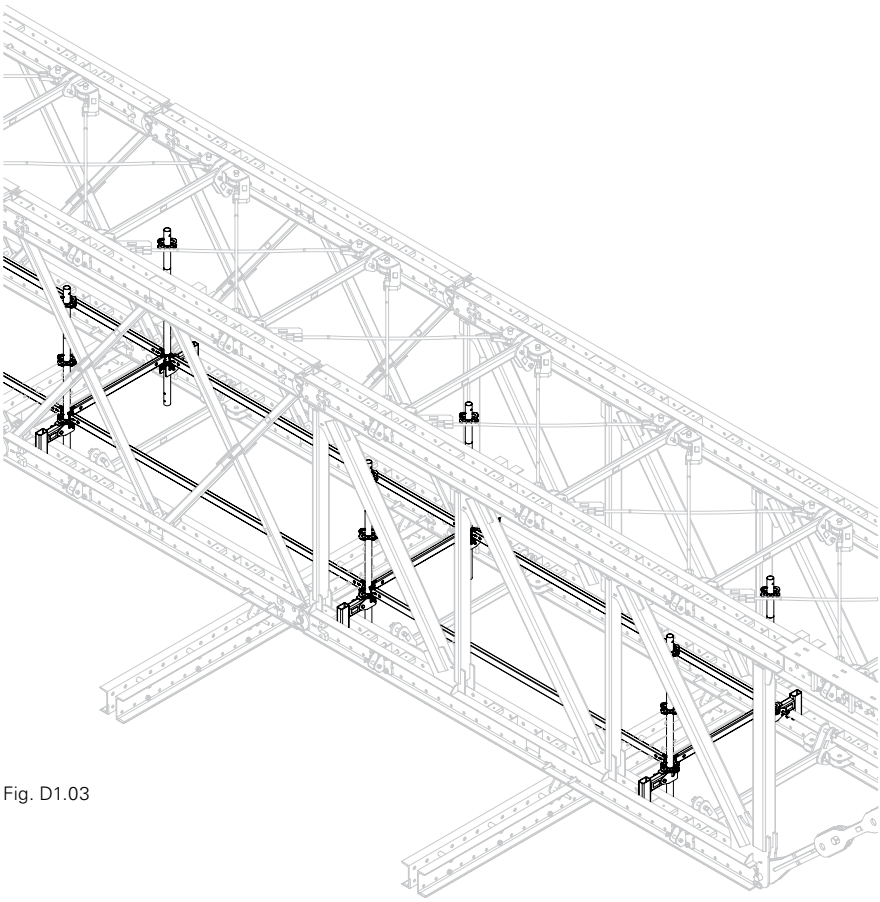

Fig. D1.03

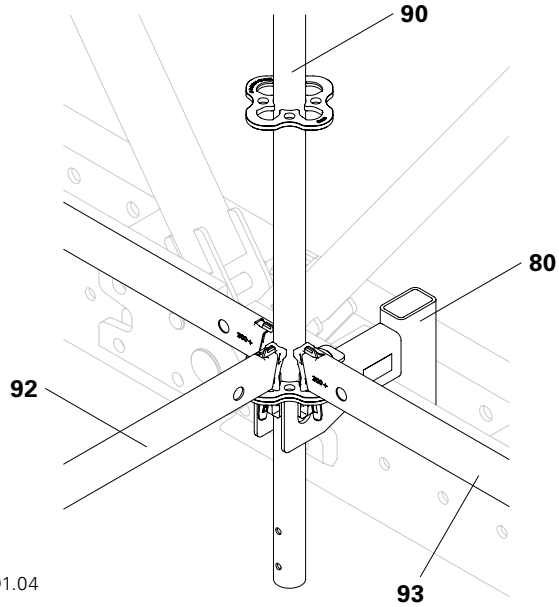

Fig. D1.04

3. Hook the ledger (92) into the rosettes on both sides. The ledger (92) is positioned vertically to the truss package.
4. Place four Steel Decks (94) in the field.
5. Hook additional ledgers (92) and (93) into the rosettes of the Top Standards as guardrails.

(Fig. D1.05)

- Are all wedges of the ledgers securely in place?
- Are all steel decks locked in position with the integrated protection against lifting?
- Are all the clamps of the steel decking flush with the decks when closed?

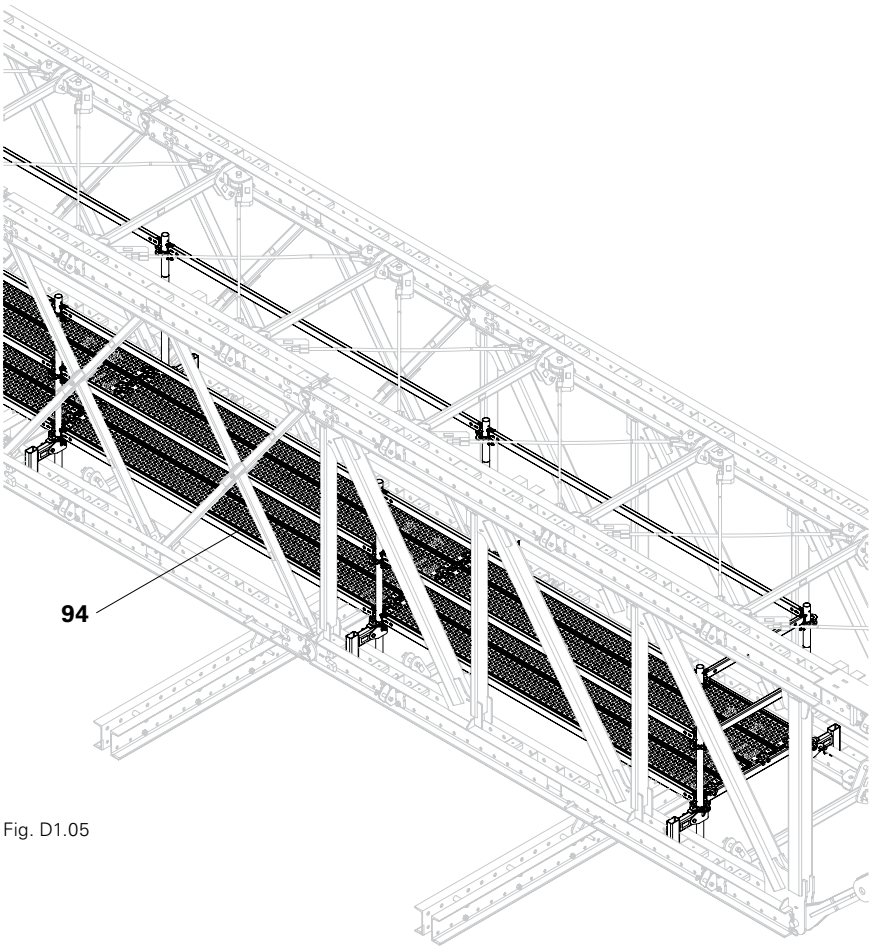

Fig. D1.05

Assembly of Bracket Connection

Components

41	Cotter Pin 5/1
46	Fitting Pin Ø 26 x 105 VRB
81	Bracket Connector UP-VRB

- This step is carried out together with the assembly of the bracing connections. See "Mounting the Bracing Connections" on Page 24.
- Assembly of the Bracket Connector UP-VRB takes place on the outer side of the truss package.

Assembly

1. At a distance of 40.8 cm, insert the Bracket Connector UP-VRB (81) between the two guardrails of the bottom chord.
2. Fit bolts (46) and secure with cotter pins (41). (Fig. D1.06)
3. Mount additional Bracket Connectors (80) at a distance of 300 cm.(Fig. D1.07)

Depending on the project, the distances can be changed especially in the area of the supports.

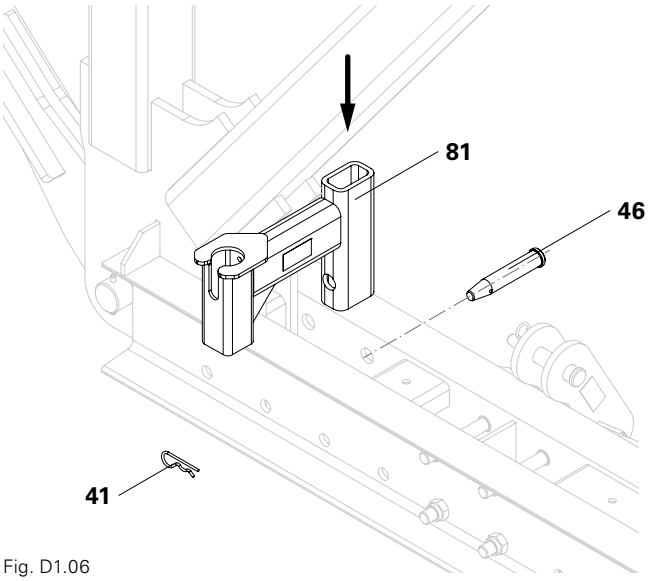

Fig. D1.06

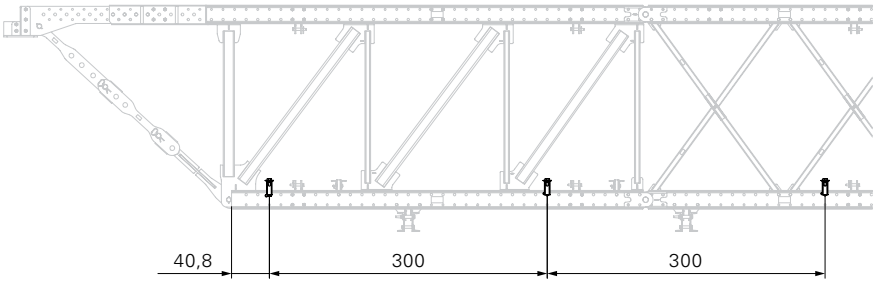

Fig. D1.07

Assembly of Bracket on the Truss Package

Components

90	Top Standard UVH 150
91	Ledger UH 75 Plus
93	Ledger UH 300 Plus
94	Steel Deck UDG 25 x 300
95	Top Standard UVH 100
96	Console Bracket UCM 75 with Spigot

This step is carried out after the horizontal and vertical bracing has been installed. See “Mounting the Horizontal Bracing” on Page 29 and “Mounting the Vertical Bracing” on Page 32.

- The permissible live load is 75 kg/m².
- Firmly secure the wedge of the ledger by means of a 500-g hammer.
- Lock the steel decking using the integrated protection against lifting.

Assembly

1. Insert the Top Standard (90) with the long tube protrusion into the Bracket Connector (80).
2. Attach Console Bracket (96) to the rosette. The Console Bracket is positioned vertically to the truss package.
3. Attach the Top Standard (95) to the Console Bracket.(Fig. D1.08)
4. Hook the ledger (93) into the lower rosettes on both sides. The ledger is positioned parallel to the truss package. (Fig. D1.09)

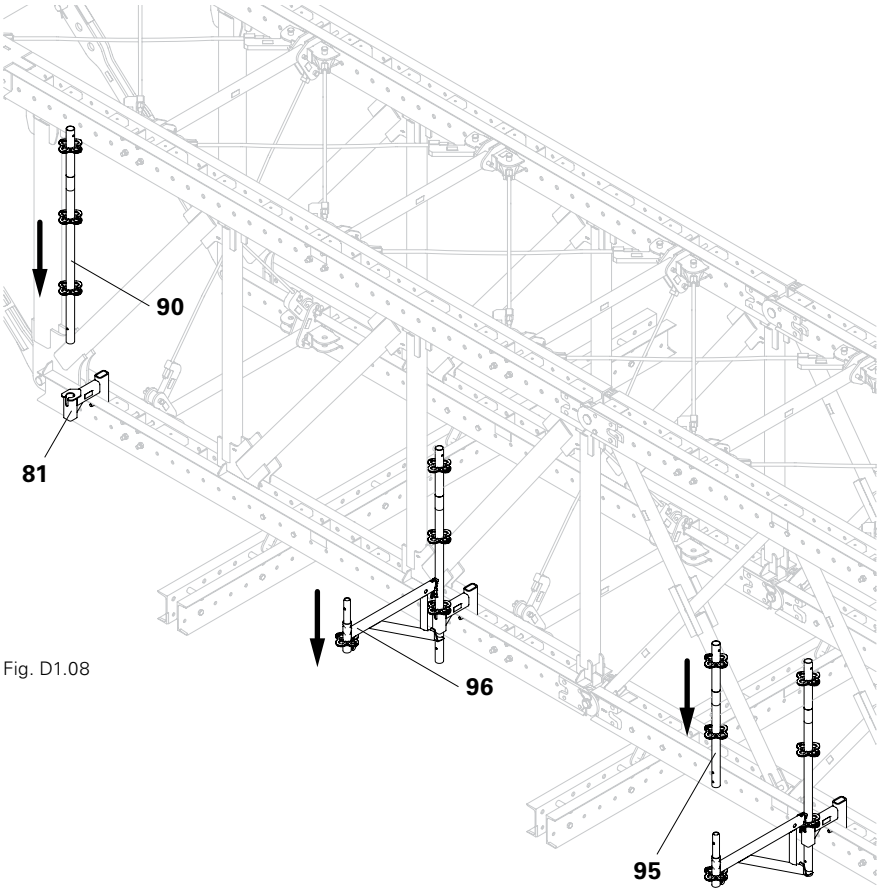

Fig. D1.08

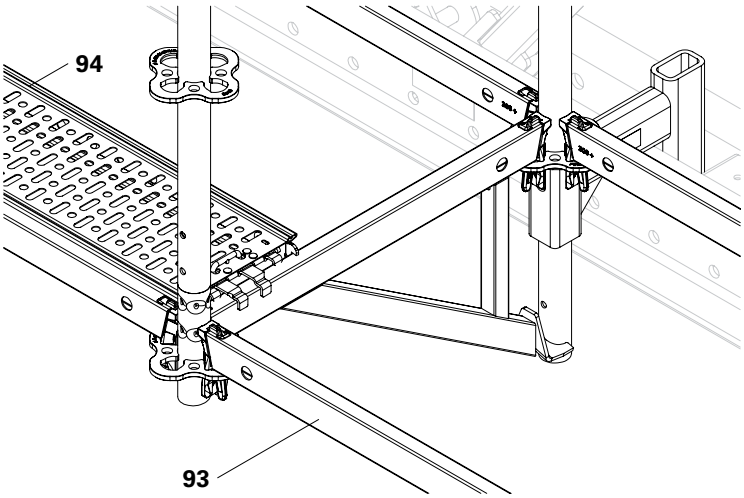

Fig. D1.09

5. Place three Steel Decks (94) in the field.
6. Hook additional ledgers (91) and (93) into the rosettes of the Top Standards (90) and (95) as guardrails on the outer sides.

(Fig. D1.10)

- Are all wedges of the ledgers securely in place?
- Are all steel decks locked in position with the integrated protection against lifting?
- Are all the clamps of the steel decking flush with the decks when closed?

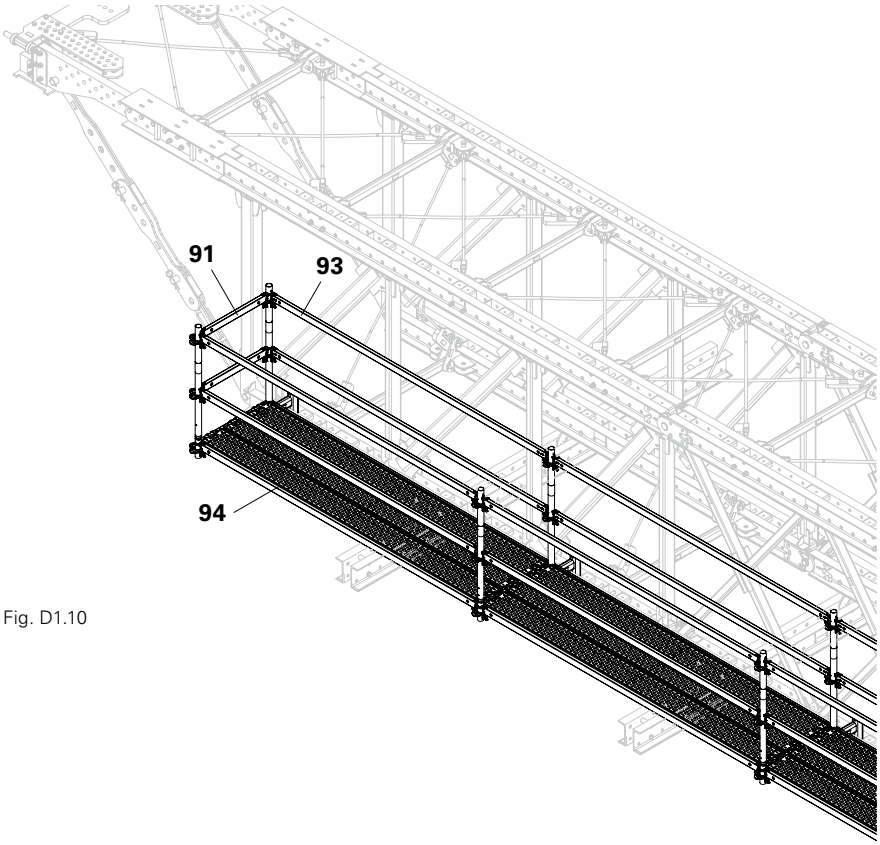

Fig. D1.10

- A project-specific dismantling plan complete with all intermediate states is required! The dismantling plan is binding and must be followed at all times.
- Dismantling the Heavy-Duty Truss Girder takes place only after the project manager has given the go ahead.

Attach PPE!

Dismantling single trusses

1. Lower the Main Beams (35), including the truss girder and formwork, onto the supports.
2. Remove the entire formwork assembly.
3. Loosen the connection of the Coupling Posts to the single truss.
4. Attach the lifting chain with the bolt (44) to the centering plate (20) and secure with cotter pin. Repeat procedure at the other end of the single truss.

(Fig. E1.01 + E1.01a)

Apply lubricant to the Main Beam. This makes it easier to remove the truss package and single trusses.

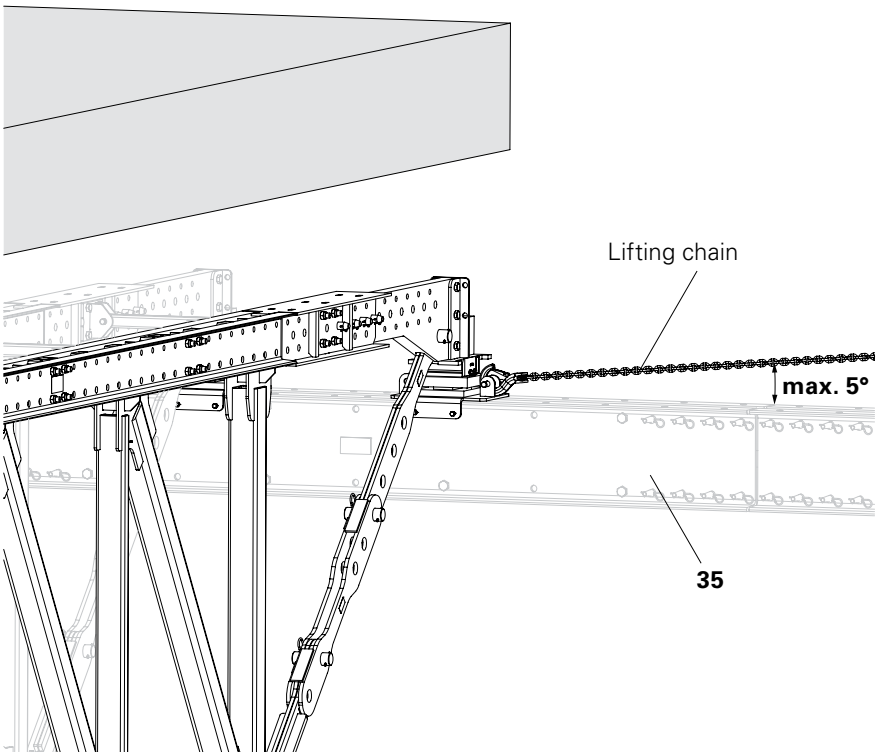

Fig. E1.01

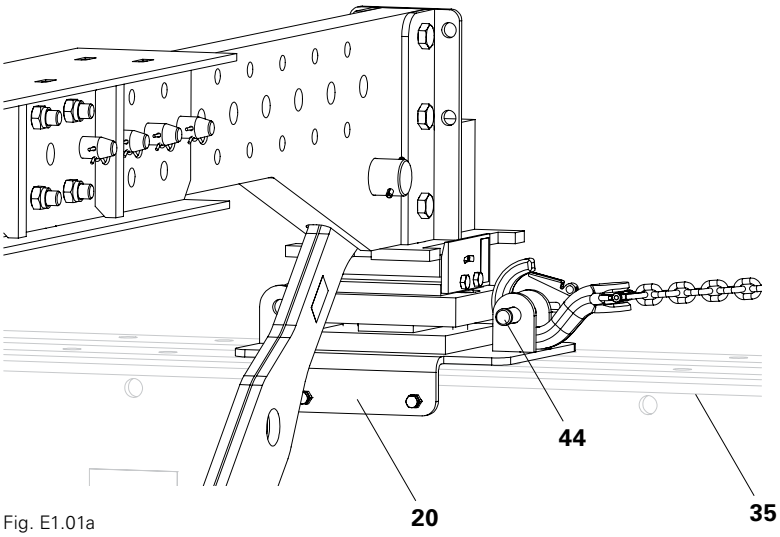

Fig. E1.01a

Danger

Single truss could slide off the Main Beam!
Serious injury or death due to components falling to the ground.

⇒ Pull single trusses outwards on both sides evenly and smoothly.
⇒ Leave the area of risk under the single truss.

5. Pull single truss outwards along the Main Beam until the single truss is completely removed. The single truss is guided on the Main Beam through the centering plate.
6. Attach single truss to the crane lifting gear and crane out. For this, select suitable load-bearing points on the single truss.

(Fig. E1.02)

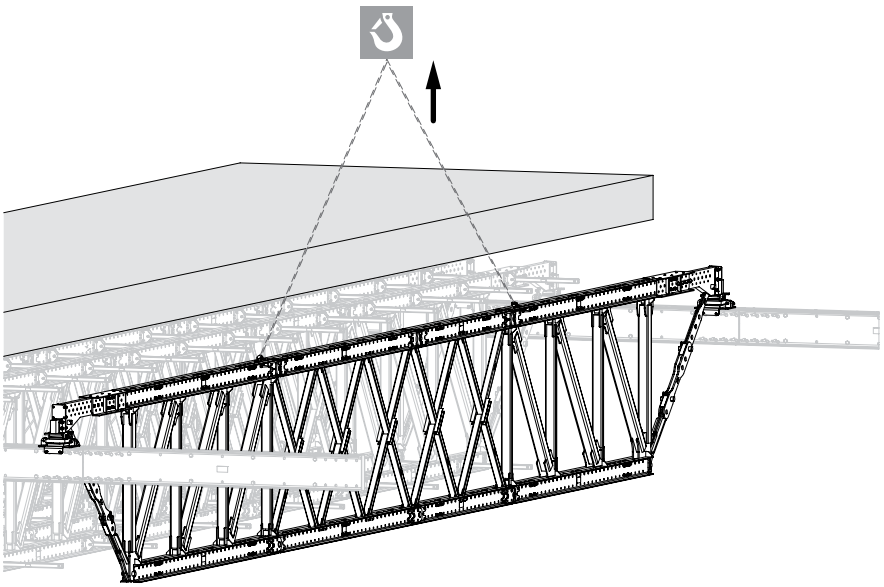

Fig. E1.02

Dismantling the truss package takes place in the same way. Firstly, the Horizontal Bearing must be removed.

Removing the Horizontal Bearing

1. Remove cotter pins and pull out bolts (23.6).
2. Remove clamps (23.2).
3. Remove bolts (23.1).
4. Remove Horizontal Bearing (23) from the Main Beam (35).

(Fig. E1.03)

Dismantling the girder package

1. Lower the Main Beam (35), including the truss girder and formwork, onto the supports.
2. Remove the entire formwork assembly.
3. If fitted, release the Coupling Post or bracing connections to the adjacent single trusses or truss package.
4. Attach the lifting chain to the centering plate (20) with the bolt (44) and secure with cotter pin. Repeat procedure at the other end of the truss package.

(Fig. E1.01a)

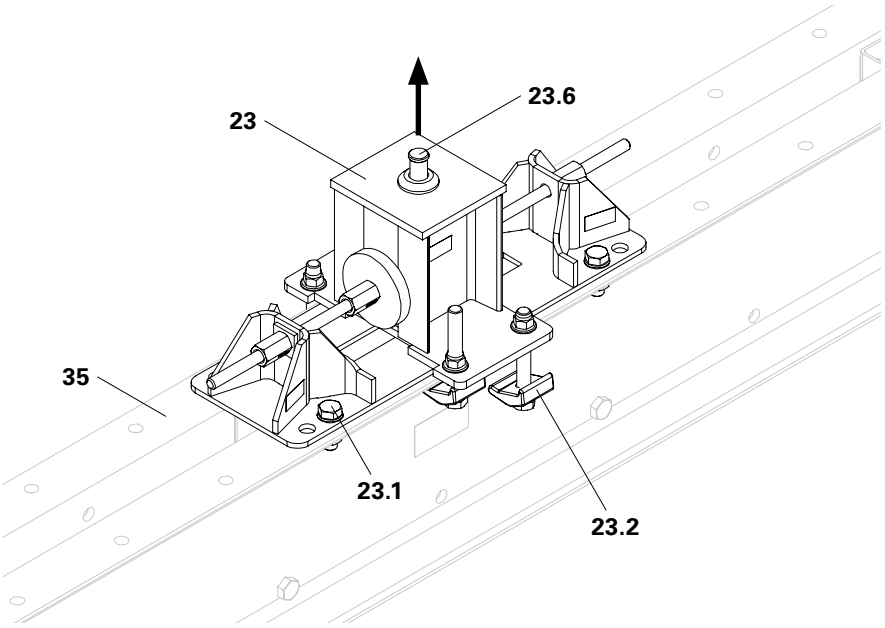

Fig. E1.03

Danger

Truss package could slide off the Main Beam!
Serious injury or death due to components falling to the ground.

⇒ Pull truss package outwards on both sides evenly and smoothly.
⇒ Leave the area of risk under the truss package.

5. Pull truss package outwards along the Main Beam (35) until the truss package is completely removed. The truss package is guided on the Main Beam through the centering plate.
6. Attach truss package to the crane lifting gear and crane out. For this, select suitable load-bearing points on the truss package.

Dismantling Single Trusses

- Position timbers on the dismantling area. Ensure that each frame element is supported by two timbers.
- Lay the single truss flat on the timbers.
- Ensure that the connecting bolts (49) of the frames can be knocked out in a downwards direction.

Dismantling the Bearing Frame
If necessary, retract the Telescopic Box. (Fig. E2.01 + E2.02)

Dismantling
1. Unscrew the Coupling Shoes (5) in the top and bottom chords.
2. Remove the connecting bolts (49) from the adjacent frame element. (Fig. E2.03 + E2.04)
3. Attach the frames to the fitting pins in the top chord or with lifting straps to the crane.
4. Crane out frame and stack ready for transportation.

Repeat Steps 2 - 4 for all additional frame elements of the single truss.

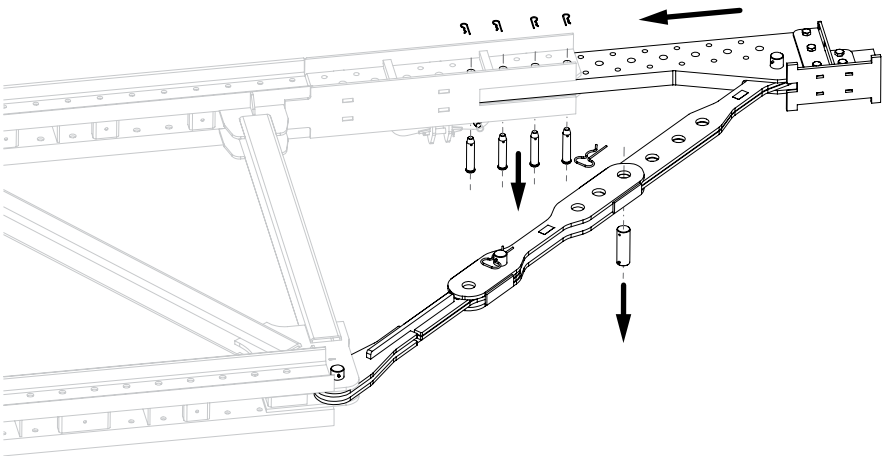

Fig. E2.01

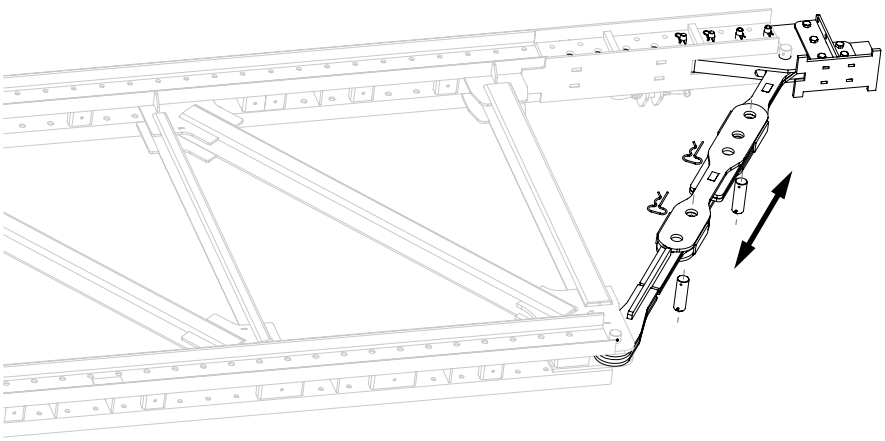

Fig. E2.02

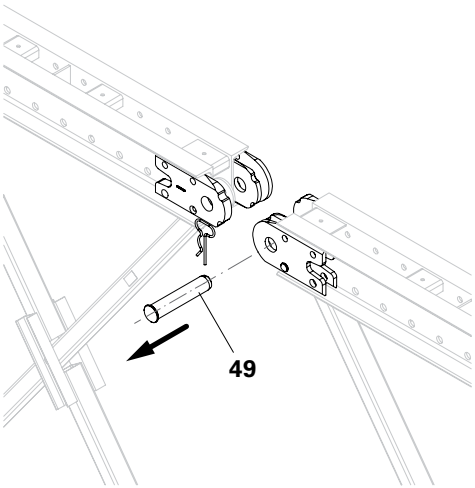

Fig. E2.03

Dismantling the Truss Package

- Position Climbing Rails (70) on the dismantling area. Ensure that each frame element is supported by at least one Climbing Rail. (Fig. E2.04)
- The last frame element on each side must be supported by two Climbing Rails.
- Mount the Cross Connector (71) at a distance of 92.75 cm from the edge of the Climbing Rail.
- At the distance of the Bracing Posts (6), mount additional Cross Connectors on the Climbing Rails.
- Place the truss package on the Climbing Rails and fix it to the Cross Connectors.

Dismantling the Bearing Frame
If necessary, retract the Telescopic Box before carrying out Steps 1 - 9. (Fig. E2.01 and E2.02)

Dismantling

1. If fitted, dismantle Bracing Posts or Coupling Shoes which are connected to the adjacent package.
2. Remove vertical and horizontal bracing.
3. Attach Bracing Traverse to the crane lifting gear, dismantle and then crane out.
4. Dismantle Bracing Posts (6).
5. Unscrew Bracing Shoes (3), Vertical Bracing Shoes (4) and Coupling Shoes (5).
6. Attach the frames to the fitting pins in the top chord or with lifting straps to the crane.
7. Knock out fitting pins from the Cross Connector.
8. Remove the connecting bolts (49) from the adjacent frame element. (Fig. E2.03)

Warning
Be aware of heavy moving components that can overturn or move in an uncontrolled way!
This could result in serious contusions or injury.
⇒ Raise the crane lifting gear until it is tensioned.
⇒ Do not stand under suspended loads.
⇒ Do not stand between elements of the truss package.

9. Crane out frame and stack ready for transportation.

Repeat Steps 6 - 9 for all additional frame elements of the truss package.

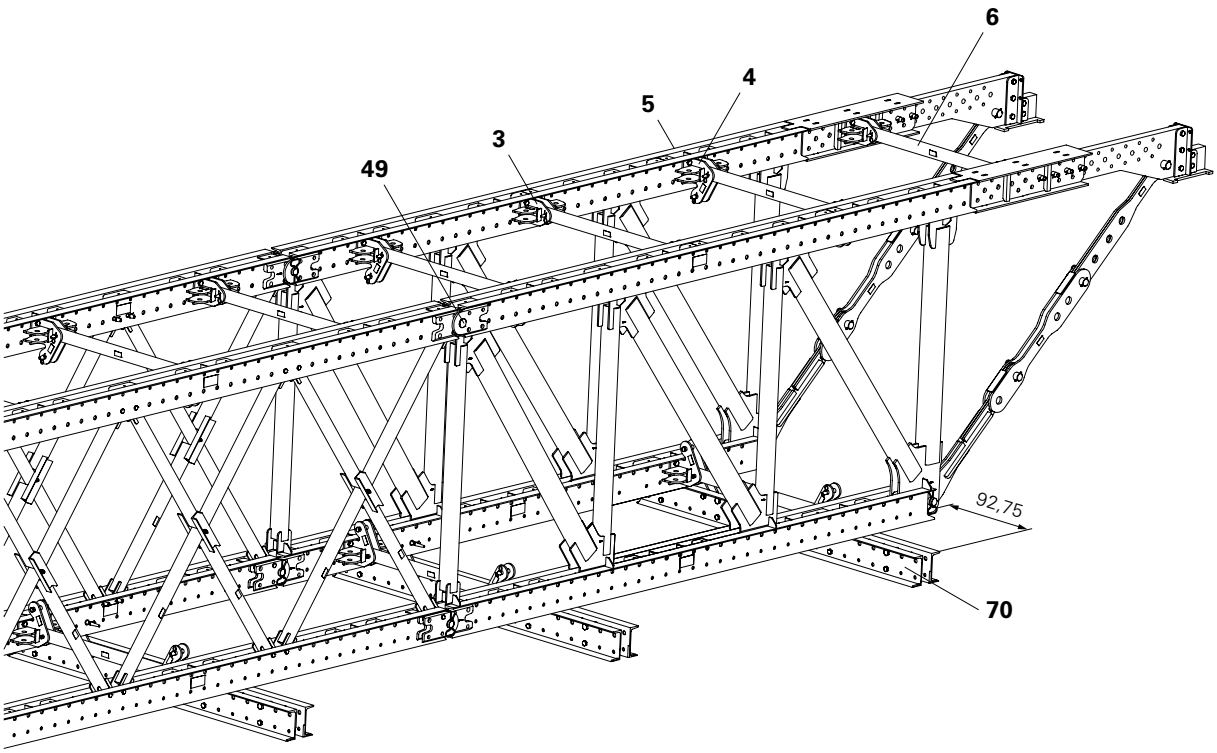

Fig. E2.04

Notes

Item no.	Weight kg		
128086	1120.000	**Bearing Frame 5.25 m VRB** Functional dimension: 5.25 m - 6.00 m. Frame for the upper chord support on the Main Beam.	**Complete with** 1 pc. 125355 Bolt Ø 50 x 250, VRB 4 pc. 125356 Cotter PIN 6/1 Ø 50, VRB 4 pc. 113626 Bolt Ø 50 x 155 4 pc. 018060 Cotter Pin 4/1, galv. 4 pc. 125347 Fitting Pin Ø 30, VRB

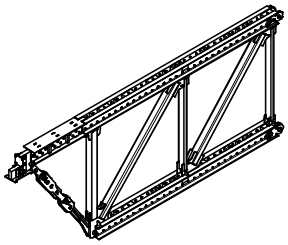

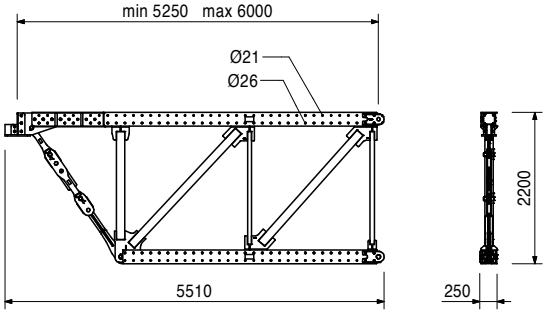

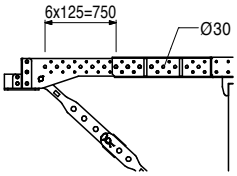

126578	1300.000	**Bearing Frame 6.0 m VRB** Functional dimension: 6.00 m - 6.75 m. Frame for the upper chord support on the Main Beam.	**Complete with** 1 pc. 125355 Bolt Ø 50 x 250, VRB 4 pc. 125356 Cotter PIN 6/1 Ø 50, VRB 4 pc. 113626 Bolt Ø 50 x 155 4 pc. 018060 Cotter Pin 4/1, galv. 4 pc. 125347 Fitting Pin Ø 30, VRB

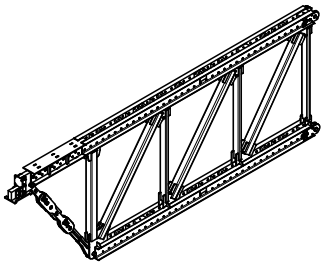

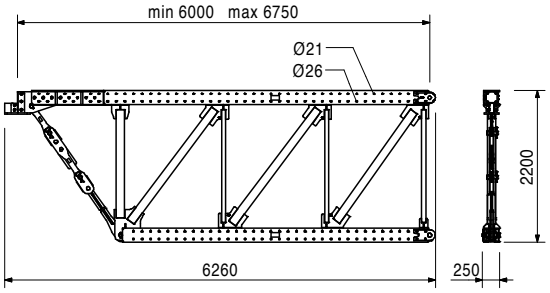

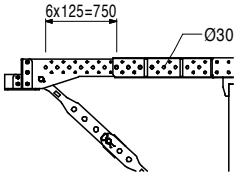

Item no.	Weight kg		
125153	401.000	**Coupling Joint Frame 1.5 m VRB** Frame for high shear forces, for bottom chord support of coupling joint suspensions.	**Complete with** 1 pc. 125413 Pressure Pole Starter VRB 1 pc. 125409 Diagonal Bracing 1.5 m VRB 2 pc. 125405 Chord 1.5 m VRB, coat 2 pc. 125355 Bolt Ø 50 x 250, VRB 2 pc. 125356 Cotter PIN 6/1 Ø 50, VRB 4 pc. 125347 Fitting Pin Ø 30, VRB 4 pc. 018060 Cotter Pin 4/1, galv.

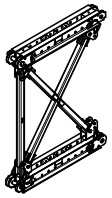

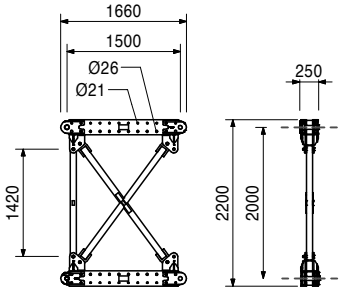

125154	675.000	**Coupling Joint Frame 3.0 m VRB** Frame for high shear forces, for bottom chord support of coupling joint suspensions.	**Complete with** 1 pc. 125413 Pressure Pole Starter VRB 2 pc. 125409 Diagonal Bracing 1.5 m VRB 2 pc. 125419 Chord 3,0 m, coat 2 pc. 125355 Bolt Ø 50 x 250, VRB 2 pc. 125356 Cotter PIN 6/1 Ø 50, VRB 8 pc. 125347 Fitting Pin Ø 30, VRB 8 pc. 018060 Cotter Pin 4/1, galv.

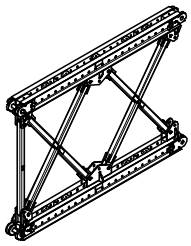

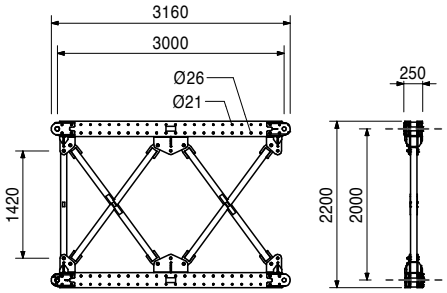

127285	501.000	**Standard Frame 3.0 m VRB** Frame for high bending moment loads.	**Complete with** 2 pc. 127284 Chord 3,0 m, coat 2 pc. 125371 Diagonal Pole Interrupted VRB 2 pc. 125381 Diagonal Pole Continuous VRB 2 pc. 125355 Bolt Ø 50 x 250, VRB 2 pc. 125356 Cotter PIN 6/1 Ø 50, VRB 4 pc. 125345 Fitting Pin Ø 26 x 105, VRB 4 pc. 125351 Fitting Pin Ø 26 SR, VRB 8 pc. 018060 Cotter Pin 4/1, galv.

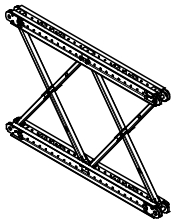

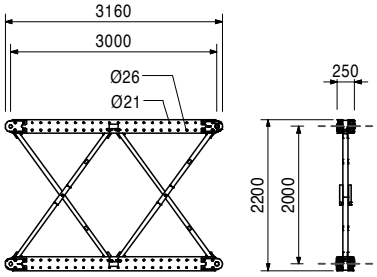

Item no.	Weight kg		
125155	709.000	**Standard Frame 4.5 m VRB** Frame for high bending moment loads.	**Complete with** 2 pc. 125379 Chord 4.5 m VRB, coat 2 pc. 125356 Cotter PIN 6/1 Ø 50, VRB 3 pc. 125371 Diagonal Pole Interrupted VRB 3 pc. 125381 Diagonal Pole Continuous VRB 2 pc. 125355 Bolt Ø 50 x 250, VRB 4 pc. 125351 Fitting Pin Ø 26 SR, VRB 8 pc. 125345 Fitting Pin Ø 26 x 105, VRB 12 pc. 018060 Cotter Pin 4/1, galv.

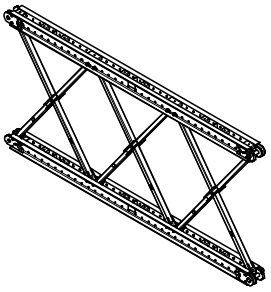

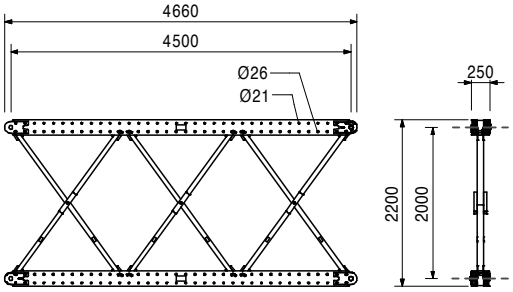

125156	915.000	**Standard Frame 6.0 m VRB** Frame for high bending moment loads.	**Complete with** 4 pc. 125371 Diagonal Pole Interrupted VRB 4 pc. 125381 Diagonal Pole Continuous VRB 2 pc. 125387 Chord 6 m, coat 2 pc. 125355 Bolt Ø 50 x 250, VRB 2 pc. 125356 Cotter PIN 6/1 Ø 50, VRB 4 pc. 125351 Fitting Pin Ø 26 SR, VRB 12 pc. 125345 Fitting Pin Ø 26 x 105, VRB 16 pc. 018060 Cotter Pin 4/1, galv.

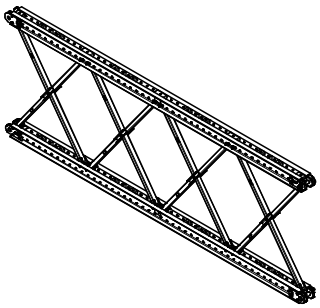

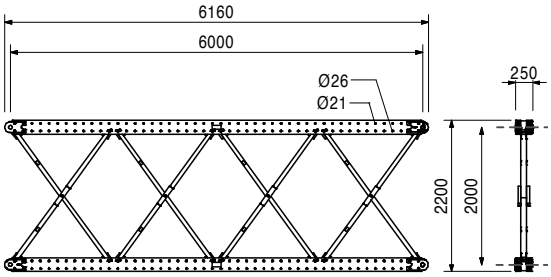

127136	25.200	**Cross Fall Bearing VRB** For supporting the Bearing Frames on the yoke when the Main Beam is inclined transversely > 0% - 7%.	**Complete with** 2 pc. 111137 Hex Bolt ISO4017 M20 x 55-8.8, galv.

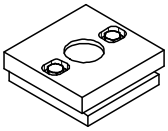

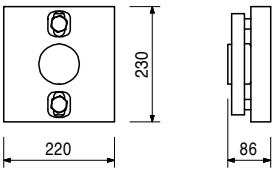

Item no.	Weight kg	
127143	12.200	**Longitudinal Bearing VRB** For supporting the Bearing Frames on the Main Beam from 0% - 7% longitudinal inclination. **Complete with** 4 pc. 710266 Bolt ISO 4017 M12 x 25-8.8, galv. 2 pc. 710417 Sleeve ISO 8752-06, 0 x 025,galv.

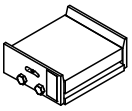

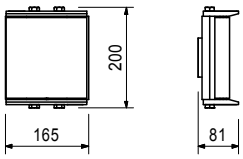

Accessories

128019	13.500	**Centering Plate HDT - VRB**

128019	13.500	**Centering Plate HDT - VRB** For centring the Longitudinal Bearing VRB on the Main Beam and for pulling out the Truss Girder from the side during disassembly. **Complete with** 1 pc. 104031 Fitting Pin Ø 21 x 120 1 pc. 018060 Cotter Pin 4/1, galv. 4 pc. 710328 Hex.Bolt ISO 4017 M10x40-8.8, galv.

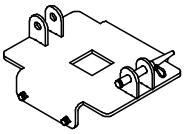

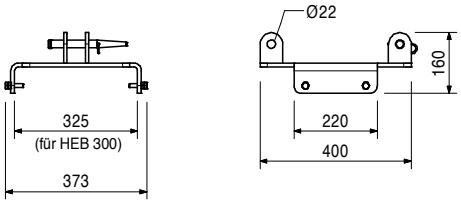

131852	63.300	**Horizontal Bearing-2 VRB** For deriving horizontal forces of the entire system into the Main Beam.

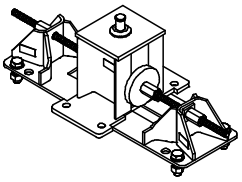

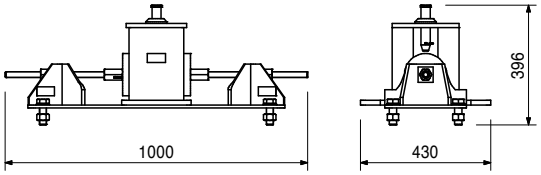

Accessories

131031	10.100	**Cross Fall Adaptor VRB**

131031	10.100	**Cross Fall Adaptor VRB** For the height compensation at the Horizontal Bearing-2 VRB when using Cross Fall Bearing VRB.

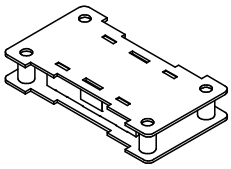

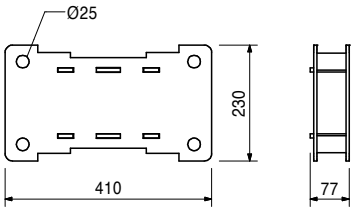

Accessories

131852	63.300	**Horizontal Bearing-2 VRB**

Item no.	Weight kg	
125764	15.000	**Bracing Shoe VRB** Connection for the horizontal bracing on the top chord of the truss package.

Complete with
1 pc. 125349 Fitting Pin Ø 21 x 105, VRB
1 pc. 018060 Cotter Pin 4/1, galv.

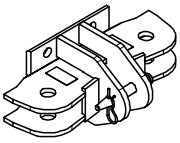

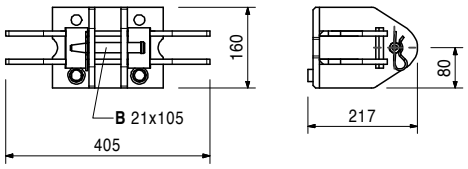

Accessories

711084	0.420	**Bolt ISO 4014 M20 x 150-8.8, galv.**
781053	0.065	**Nut ISO 7040 M20-8, galv.**

125770	17.900	**Vertical Bracing Shoe VRB** Connection for the horizontal and vertical bracing on the upper and lower chord of the truss package.

Complete with
1 pc. 125345 Fitting Pin Ø 26 x 105, VRB
2 pc. 018060 Cotter Pin 4/1, galv.
1 pc. 125349 Fitting Pin Ø 21 x 105, VRB

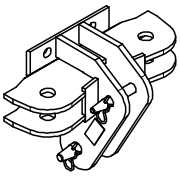

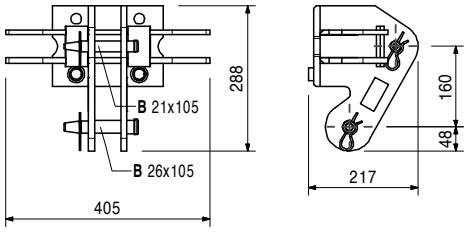

Accessories

711084	0.420	**Bolt ISO 4014 M20 x 150-8.8, galv.**
781053	0.065	**Nut ISO 7040 M20-8, galv.**

125732	5.190	**Coupling Shoe VRB** Connection for coupling single trusses to the truss package.

Complete with
1 pc. 125349 Fitting Pin Ø 21 x 105, VRB
1 pc. 018060 Cotter Pin 4/1, galv.

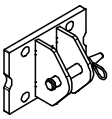

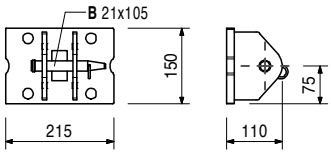

Accessories

711084	0.420	**Bolt ISO 4014 M20 x 150-8.8, galv.**
781053	0.065	**Nut ISO 7040 M20-8, galv.**

Item no.	Weight kg	
125741	7.870	**Articulated Spanner DW 20 VRB** Articulated clamping component for DW20 - bracing in the upper chord.
		Accessories
030700	2.560	**Tie Rod DW 20, spec. length**
030580	0.371	**Hex. Nut DW 20 SW 36/60, weldable**

Complete with
1 pc. 125347 Fitting Pin Ø 30, VRB
1 pc. 018060 Cotter Pin 4/1, galv.

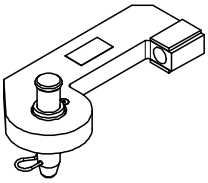

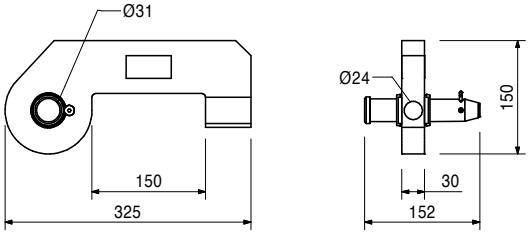

125727	4.020	**Eye Nut DW 20 VRB** Articulated connection component for DW20 - bracing.
		Accessories
030700	2.560	**Tie Rod DW 20, spec. length**

Complete with
1 pc. 125347 Fitting Pin Ø 30, VRB
1 pc. 018060 Cotter Pin 4/1, galv.

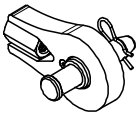

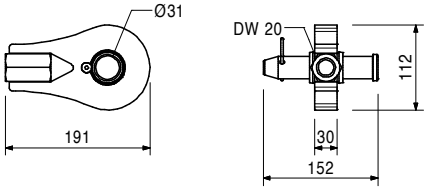

		Tie Rod DW 20
030700	2.560	**Tie Rod DW 20, spec. length**
030800	0.000	**Cutting Cost Tie Rod DW 20/B 20**

Note
Non-weldable! Take official Approval into consideration!
Technical Data
Permissible tension force 150 kN.

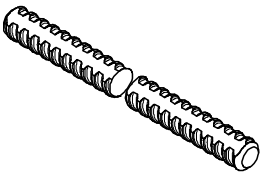

030580	0.371	**Hex. Nut DW 20 SW 36/60, weldable** For anchoring with Tie Rod DW 20 and B 20.

Note
Weldable!
Technical Data
Permissible load 150 kN.

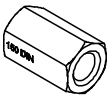

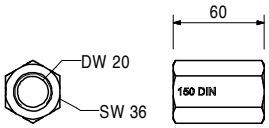

Item no.	Weight kg	
115375	6.100	**Articulated Spanner RCS DW 15** For tensioning and as an articulated connection to the Climbing Rail RCS, Steel Waler SRU or Bracing Shoe RCS for bracing with DW 15.

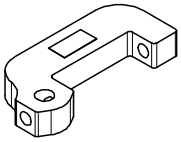

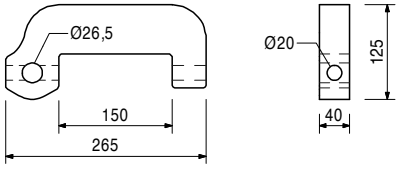

Accessories

104031	0.462	**Fitting Pin Ø 21 x 120**
018060	0.014	**Cotter Pin 4/1, galv.**
111567	0.729	**Fitting Pin Ø 26 x 120**
022230	0.033	**Cotter Pin 5/1, galv.**
030070	0.222	**Hex. Nut DW 15 SW 30/50, galv.**
030030	1.440	**Tie Rod DW 15, spec. length**

115378	1.080	**Eye Nut RCS DW 15** As an articulated connection to the Climbing Rail RCS, Steel Waler SRU for bracing with DW 15.

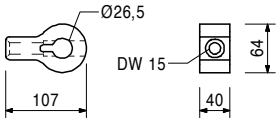

Accessories

104031	0.462	**Fitting Pin Ø 21 x 120**
018060	0.014	**Cotter Pin 4/1, galv.**
111567	0.729	**Fitting Pin Ø 26 x 120**
022230	0.033	**Cotter Pin 5/1, galv.**

		Tie Rod DW 15
030030	1.440	**Tie Rod DW 15, spec. length**
030050	0.000	**Cutting Cost Tie Rod DW 15, B 15**

Note
Non-weldable! Take official Approval into consideration!
Technical Data
Permissible tension force 90 kN.

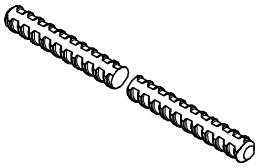

030070	0.222	**Hex. Nut DW 15 SW 30/50, galv.** For anchoring with Tie Rod DW 15 and B 15.

Technical Data
Permissible load 90 kN.

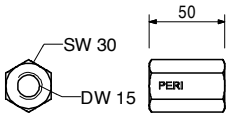

Item no.	Weight kg	
125736	24.600	**Bracing Post 2.25 m, VRB** Bracing post for a truss package with 2.25 m axis spacing.

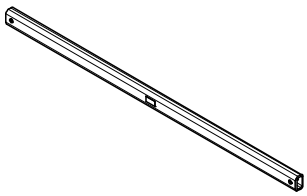

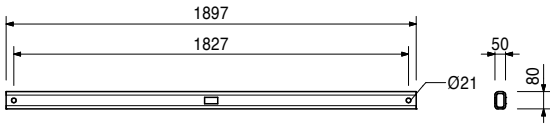

Accessories

125764	15.000	**Bracing Shoe VRB**
125770	17.900	**Vertical Bracing Shoe VRB**

125734	14.900	**Bracing Post 1.50 m, VRB** Bracing post for a truss package with 1.5 m axis spacing.

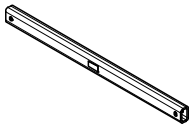

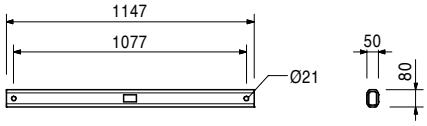

Accessories

125764	15.000	**Bracing Shoe VRB**
125770	17.900	**Vertical Bracing Shoe VRB**

125756	4.430	**Coupling Post 1.0 m, VRB** Post for coupling single trusses with 1.0 m axis spacing.

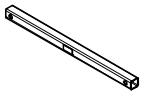

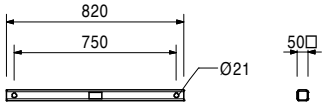

Accessories

125732	5.190	**Coupling Shoe VRB**

125746	1.700	**Coupling Post 0.5 m, VRB** Post for coupling single trusses with 0.5 m axis spacing.

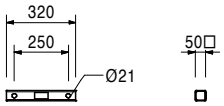

Accessories

125732	5.190	**Coupling Shoe VRB**

Item no.	Weight kg	
128091	75.900	**Bracing Traverse 150 VRB** For the connection of the truss package (1.5 m) at the Horizontal Bearing-2.

Complete with
8 pc. 125345 Fitting Pin Ø 26 x 105, VRB
8 pc. 018060 Cotter Pin 4/1, galv.

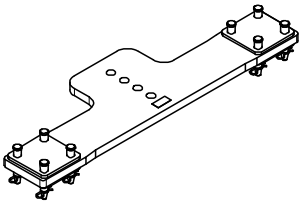

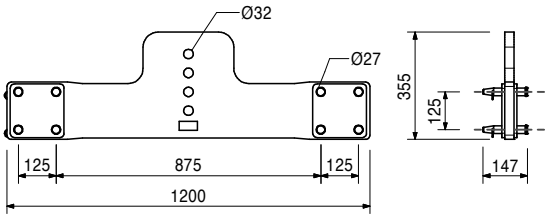

Accessories

131852	63.300	**Horizontal Bearing-2 VRB**
128103	45.000	**Bracing Traverse Connector VRB**
128098	8.100	**Bracing Spindle VRB**

128103	45.000	**Bracing Traverse Connector VRB** For the connection of the truss package (1.5 m) at the Horizontal Bearing-2.

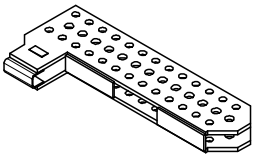

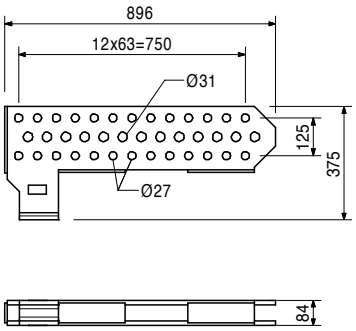

Accessories

128091	75.900	**Bracing Traverse 150 VRB**
128098	8.100	**Bracing Spindle VRB**
131852	63.300	**Horizontal Bearing-2 VRB**

128098	8.100	**Bracing Spindle VRB** For the connection of the truss package (1.5 m) at the Horizontal Bearing-2.

Complete with
4 pc. 780357 Bolt ISO 4017 M20 x 50-8.8, galv.
4 pc. 781053 Nut ISO 7040 M20-8, galv.
2 pc. 128093 TR38 Nut Sher

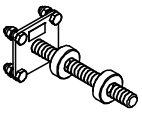

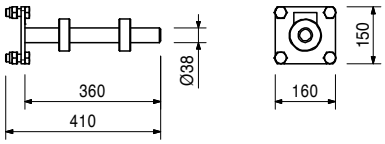

Accessories

128091	75.900	**Bracing Traverse 150 VRB**
128103	45.000	**Bracing Traverse Connector VRB**
131852	63.300	**Horizontal Bearing-2 VRB**

VRB Truss Girder

Item no.	Weight kg	
126059	500.000	**Main Beam 350 VRB** Main Beam for supporting Truss Girder VRB compatible with PERI VST Heavy Duty Shoring Tower.

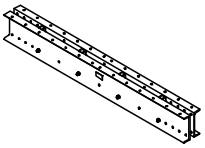

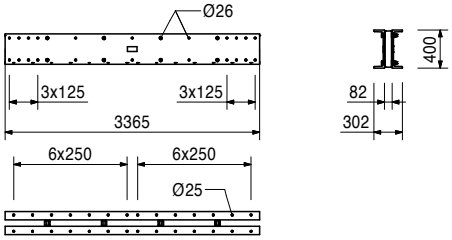

Accessories

126050	78.400	**Main Beam Connector VRB**

126062	725.000	**Main Beam 500 VRB** Main Beam for supporting Truss Girder VRB compatible with PERI VST Heavy Duty Shoring Tower.

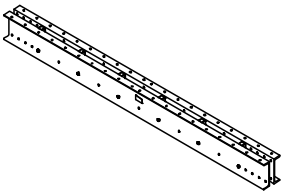

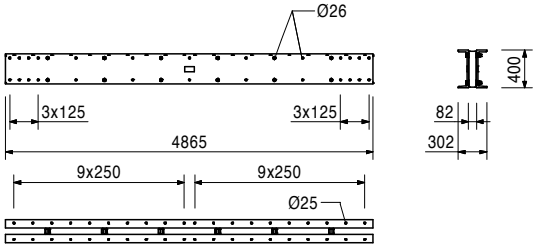

Accessories

126050	78.400	**Main Beam Connector VRB**

126065	1170.000	**Main Beam 800 VRB** Main Beam for supporting Truss Girder VRB compatible with PERI VST Heavy Duty Shoring Tower.

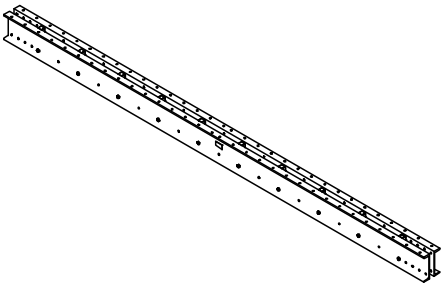

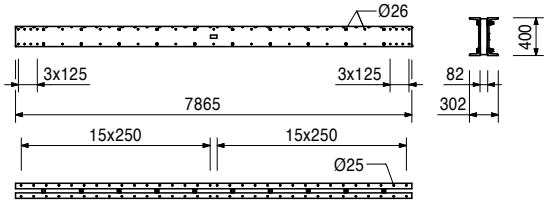

Accessories

126050	78.400	**Main Beam Connector VRB**

Item no.	Weight kg		
126050	78.400	**Main Beam Connector VRB** For the connection of Main Beams VRB.	**Complete with** 16 pc. 111567 Fitting Pin Ø 26 x 120 16 pc. 022230 Cotter Pin 5/1, galv.

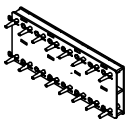

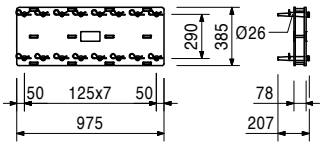

Accessories

126059	500.000	**Main Beam 350 VRB**
126062	725.000	**Main Beam 500 VRB**
126065	1170.000	**Main Beam 800 VRB**

125413	28.000	**Pressure Pole Starter VRB** Additional pressure pole for the assembly in Coupling Joint Frame 1.5 m VRB and Coupling Joint Frame 3.0 m VRB.	**Complete with** 2 pc. 125347 Fitting Pin Ø 30, VRB 2 pc. 018060 Cotter Pin 4/1, galv.

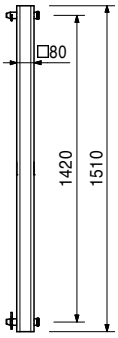

Accessories

125154	675.000	**Coupling Joint Frame 3.0 m VRB**
125153	401.000	**Coupling Joint Frame 1.5 m VRB**

126355	5.610	**Connector UP- VRB** For connecting a PERI UP Scaffold between two truss girders.	**Complete with** 1 pc. 125345 Fitting Pin Ø 26 x 105, VRB 1 pc. 018050 Pin Ø 16 x 65/86, galv. 2 pc. 018060 Cotter Pin 4/1, galv.

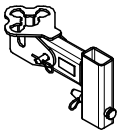

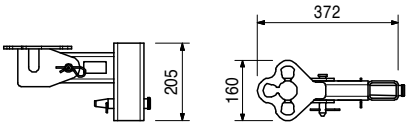

126345	7.390	**Bracket Connector UP-VRB** For connecting a PERI UP Bracket Scaffold to a truss girder.	**Complete with** 1 pc. 018060 Cotter Pin 4/1, galv. 1 pc. 125345 Fitting Pin Ø 26 x 105, VRB

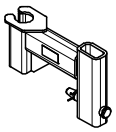

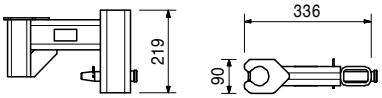

Item no.	Weight kg	
111567	0.729	**Fitting Pin Ø 26 x 120** For different connections.

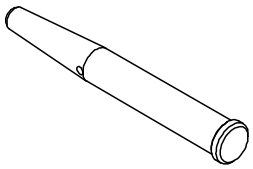

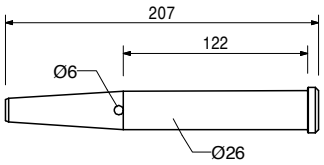

Accessories

022230	0.033	**Cotter Pin 5/1, galv.**

018060	0.014	**Cotter Pin 4/1, galv.**

022230	0.033	**Cotter Pin 5/1, galv.**

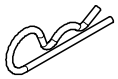

125349	0.351	**Fitting Pin Ø 21 x 105, VRB**

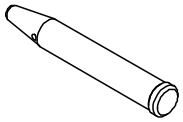

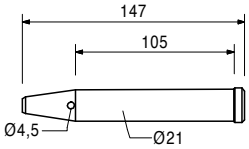

Accessories

018060	0.014	**Cotter Pin 4/1, galv.**

Item no.	Weight kg	
125345	0.548	**Fitting Pin Ø 26 x 105, VRB**

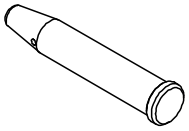

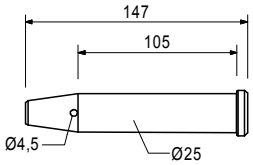

Accessories

022230	0.033	**Cotter Pin 5/1, galv.**

125347	0.800	**Fitting Pin Ø 30, VRB**

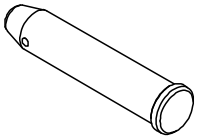

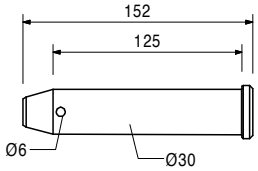

Accessories

022230	0.033	**Cotter Pin 5/1, galv.**

711084	0.420	**Bolt ISO 4014 M20 x 150-8.8, galv.**

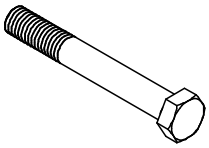

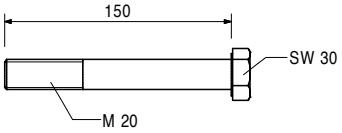

Accessories

781053	0.065	**Nut ISO 7040 M20-8, galv.**

781053	0.065	**Nut ISO 7040 M20-8, galv.** Self-locking.

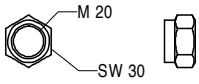

Item no.	Weight kg	
105416	0.360	**Bolt ISO 4014 M24 x 80-8.8, galv.**

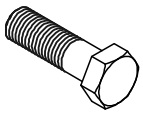

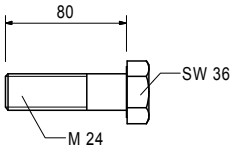

105032	0.070	**Nut ISO 7040 M24-8, galv.** Self-locking.

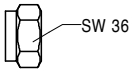

125355	3.850	**Bolt Ø 50 x 250, VRB** For connecting the Truss Girder VRB-Frames.

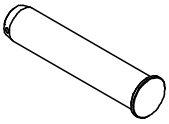

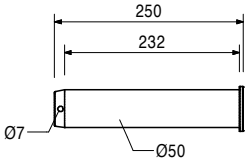

Accessories

125356	0.086	**Cotter PIN 6/1 Ø 50, VRB**

125356	0.086	**Cotter PIN 6/1 Ø 50, VRB**

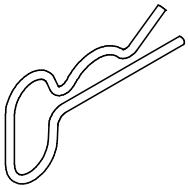

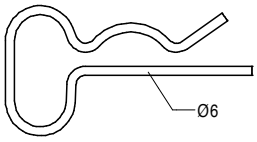

123509	13.400	**Cross Connector RCS** For crosswise connection of Climbing Rails RCS.

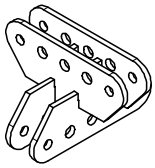

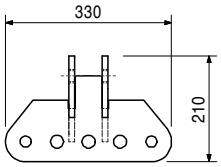

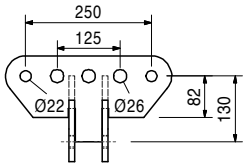

Accessories

104031	0.462	**Fitting Pin Ø 21 x 120**
018060	0.014	**Cotter Pin 4/1, galv.**
111567	0.729	**Fitting Pin Ø 26 x 120**
022230	0.033	**Cotter Pin 5/1, galv.**

Item no.	Weight kg	Climbing Rails RCS	L
114166	78.200	**Climbing Rail RCS 148**	1480
109469	130.000	**Climbing Rail RCS 248**	2480
112102	156.000	**Climbing Rail RCS 298**	2980
109470	182.000	**Climbing Rail RCS 348**	3480
112141	209.000	**Climbing Rail RCS 398**	3980
109471	262.000	**Climbing Rail RCS 498**	4980
109472	393.000	**Climbing Rail RCS 748**	7480
109610	524.000	**Climbing Rail RCS 998**	9980

Steel profile for all-purpose use of climbing application or civil constructions. With Spacers M20-82 and M24-82.

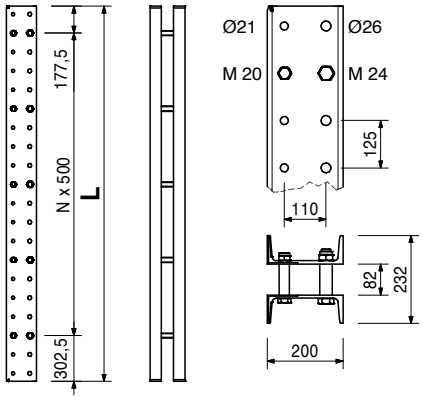

110022	0.491	**Spacer M20-82** Spacer for Climbing Rails RCS.	**Complete with** 1 pc. 104477 Bolt ISO 4014 M20 x 120-8.8, galv. 1 pc. 130341 Nut ISO 7042 M20-8, galv.

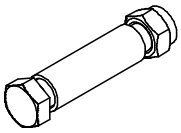

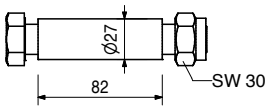

110023	0.910	**Spacer M24-82** Spacer for Climbing Rails RCS.	**Complete with** 1 pc. 109612 Bolt ISO 4014 M24 x 130-8.8, galv. 1 pc. 130342 Nut ISO 7042 M24-8, galv.

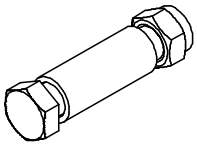

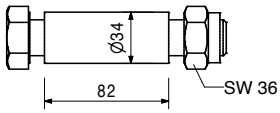

PERI International

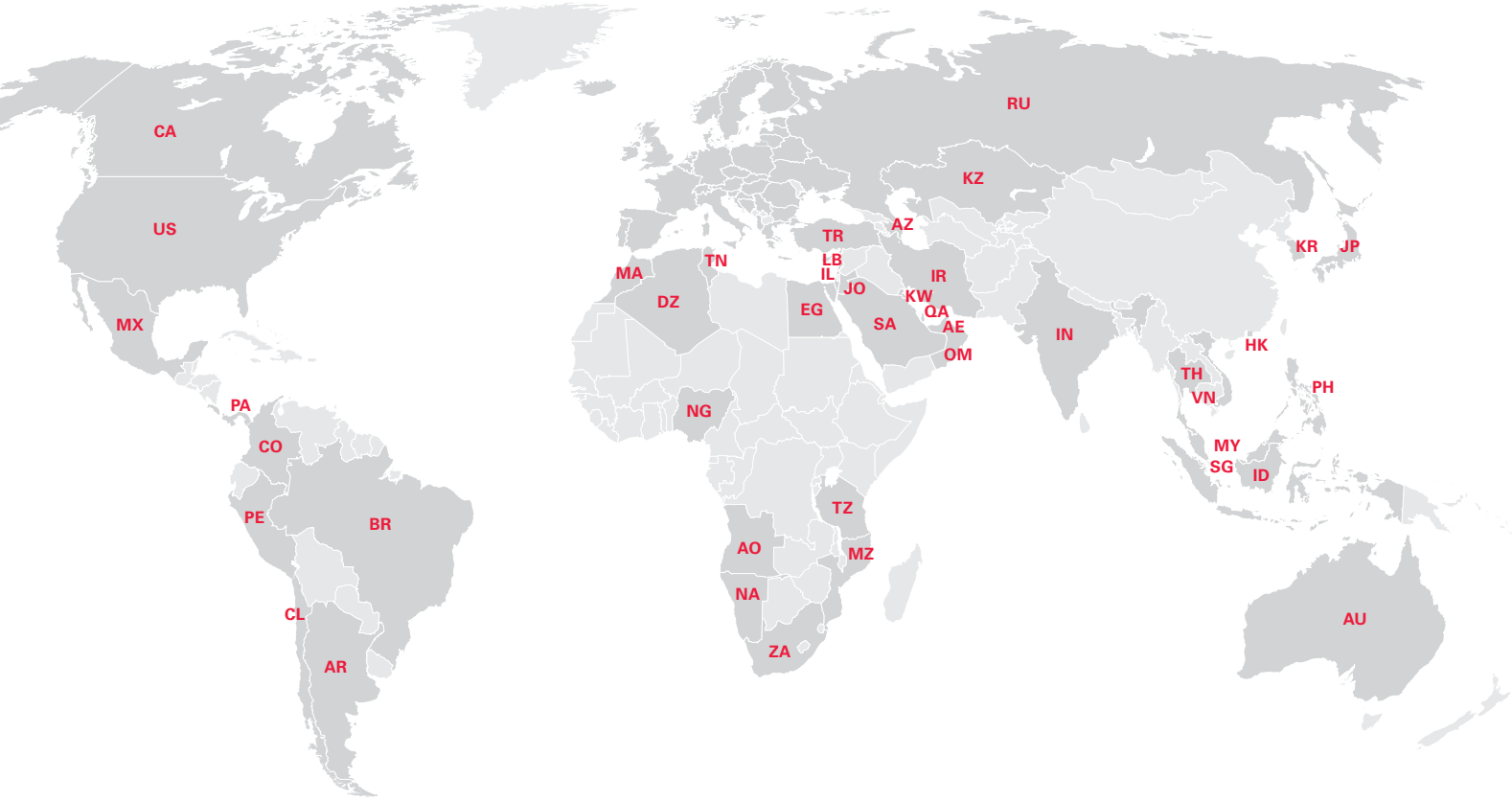

North America

CA Canada
PERI Formwork Systems, Inc.
www.peri.ca

MX Mexico
PERI Cimbras y Andamios, S.A. de C.V.
www.peri.com.mx

PA Panama
PERI Panama Inc.
www.peri.com.pa

US USA
PERI Formwork Systems, Inc.
www.peri-usa.com

South America

AR Argentina
PERI S.A.
www.peri.com.ar

BR Brazil
PERI Formas e Escoramentos Ltda.
www.peribrasil.com.br

CL Chile
PERI Chile Ltda.
www.peri.cl

CO Colombia
PERI S.A.S.
www.peri.com.co

PE Peru
PERI Peruana S.A.C.
www.peri.com.pe

Africa

AO Angola
Pericofragens, Lda.
www.peri.pt

DZ Algeria
S.A.R.L. PERI
www.peri.dz

EG Egypt
Egypt Branch Office
www.peri.com.eg

MA Morocco
PERI S.A.
www.peri.ma

MZ Mozambique
PERI (Pty.) Ltd.
www.peri.co.mz

NA Namibia
PERI (Pty.) Ltd.
www.peri.na

NG Nigeria
PERI Nigeria Ltd.
www.peri.ng

TN Tunisia
PERI S.A.U.
www.peri.es

TZ Tanzania
PERI Formwork and Scaffolding Ltd
www.peri.co.tz

ZA South Africa
PERI Formwork Scaffolding (Pty) Ltd
www.peri.co.za

Asia

AE United Arab Emirates
PERI (L.L.C.)
www.peri.ae

AZ Azerbaijan
PERI Repesentative Office
www.peri.com.tr

HK Hong Kong
PERI (Hong Kong) Limited
www.perihk.com

ID Indonesia
PT Beton Perkasa Wijaksana
www.betonperkasa.com

IL Israel
PERI F.E. Ltd.
www.peri.co.il

IN India
PERI (India) Pvt Ltd
www.peri.in

IR Iran
PERI Pars. Ltd.
www.peri.ir

JO Jordan
PERI GmbH – Jordan
www.peri.com

JP Japan
PERI Japan K.K.
www.peri.co.jp

KR Korea
PERI (Korea) Ltd.
www.perikorea.com

KW Kuwait
PERI Kuwait W.L.L.
www.peri.com.kw

KZ Kazakhstan
TOO PERI Kazakhstan
www.peri.kz

LB Lebanon
PERI Lebanon Sarl
lebanon@peri.de

MY Malaysia
PERI Formwork Malaysia Sdn. Bhd.
www.perimalaysia.com

OM Oman
PERI (L.L.C.)
www.peri.ae

PH Philippines
PERI-Asia Philippines, INC.
www.peri.com.ph

QA Qatar
PERI Qatar LLC
www.peri.qa

SA Saudi Arabia
PERI Saudi Arabia Ltd.
www.peri.com.sa

SG Singapore
PERI Asia Pte Ltd
www.periasia.com

TH Thailand
Peri (Thailand) Co., Ltd.
www.peri.co.th

TR Turkey
PERI Kalıp ve İskeleleri
www.peri.com.tr

VN Vietnam
PERI ASIA PTE LTD
www.peri.com.vn

PERI GmbH
Formwork Scaffolding Engineering
Rudolf-Diesel-Strasse 19
89264 Weissenhorn
Germany
Tel. +49 (0)7309.950-0
Fax +49 (0)7309.951-0
info@peri.com
www.peri.com

Oceania

AU Australia
PERI Australia Pty. Ltd.
www.periaus.com.au

Europe

AL Albania
PERI Kalıp ve İskeleleri
www.peri.com.tr

AT Austria
PERI Ges.mbH
www.peri.at

BA Bosnia and Herzegovina
PERI oplate i skele d.o.o
www.peri.com.hr

BE Belgium
PERI N.V.
www.peri.be

BG Bulgaria
PERI Bulgaria EOOD
www.peri.bg

BY Belorussia
IOOO PERI
www.peri.by

CH Switzerland
PERI AG
www.peri.ch

CZ Czech Republic
PERI spol. s r.o.
www.peri.cz

DE Germany
PERI GmbH
www.peri.de

DK Denmark
PERI Danmark A/S
www.peri.dk

EE Estonia
PERI AS
www.peri.ee

ES Spain
PERI S.A.U.
www.peri.es

FI Finland
PERI Suomi Ltd. Oy
www.perisuomi.fi

FR France
PERI S.A.S.
www.peri.fr

GB United Kingdom
PERI Ltd.
www.peri.ltd.uk

GR Greece
PERI Hellas Ltd.
www.perihellas.gr

HR Croatia
PERI oplate i skele d.o.o.
www.peri.com.hr

HU Hungary
PERI Kft.
www.peri.hu

IR Ireland
Siteserv Access & Formwork
www.siteservaccess.ie

IS Iceland
Armar ehf.
www.armar.is

IT Italy
PERI S.r.l.
www.peri.it

LT Lithuania
PERI UAB
www.peri.lt

LU Luxembourg
N.V. PERI S.A.
www.peri.lu

LV Latvia
PERI SIA
www.peri-latvija.lv

NL Netherlands
PERI b.v.
www.peri.nl

NO Norway
PERI Norge AS
www.peri.no

PL Poland
PERI Polska Sp. z o.o.
www.peri.com.pl

PT Portugal
Pericofragens Lda.
www.peri.pt

RO Romania
PERI România SRL
www.peri.ro

RS Serbia
PERI oplate d.o.o.
www.peri.rs

RU Russia
OOO PERI
www.peri.ru

SE Sweden
PERI Sverige AB
www.peri.se

SI Slovania
PERI oplate i skele d.o.o
www.peri.com.hr

SK Slovakia
PERI spol. s. r.o.
www.peri.sk

UA Ukraine
TOW PERI
www.peri.ua

The optimal System for every Project and every Requirement

Wall Formwork

Column Formwork

Slab Formwork

Climbing Systems

Bridge Formwork

Tunnel Formwork

Shoring Systems

Construction Scaffold

Facade Scaffold

Industrial Scaffold

Access

Protection Scaffold

Safety Systems

System-Independent Accessories

Services

PERI GmbH
Formwork Scaffolding Engineering
Rudolf-Diesel-Strasse 19
89264 Weissenhorn
Germany
Tel. +49 (0)7309.950-0
Fax +49 (0)7309.951-0
info@peri.com
www.peri.com

DE en 12 | 2018 1ma 794369 © PERI GmbH