Lifting Hook TRIO 1.5 t

Item no. 023690

Original Instructions for Use

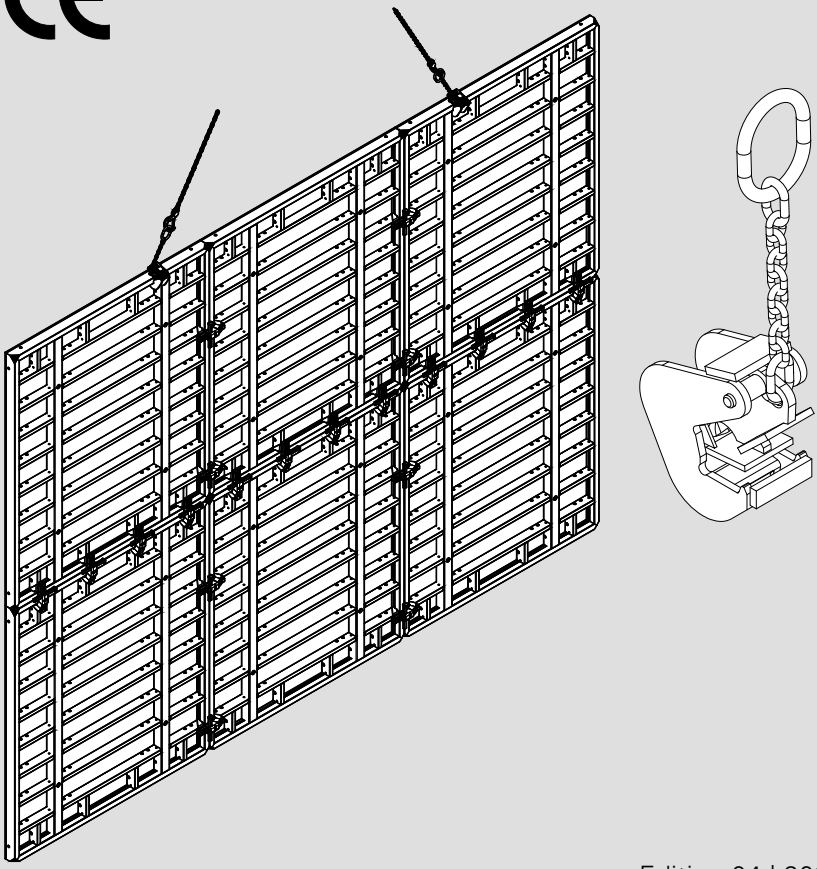

Edition 04 | 2012

Content

Key

Safety Instructions Visual Check Note

Original Instructions for Use

Introduction

Overview

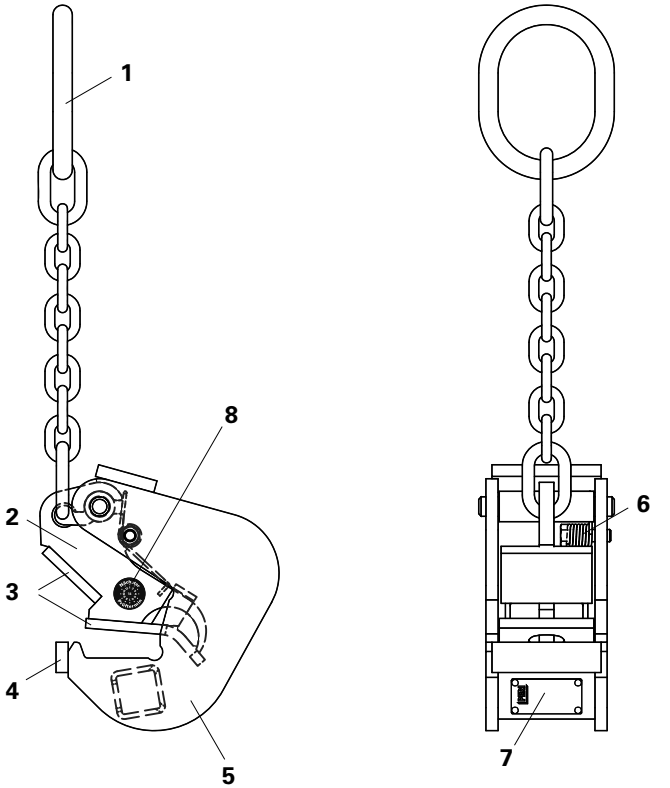

(1) Lifting Eye
(2) Clamping Jaw
(3) Pressure Plates
(4) Support Cam
(5) Housing Body
(6) Spring
(7) Type Plate
(8) Inspection Plate

Introduction

Safety Instructions

General

1. Deviations from the intended use present a potential safety risk!

2. When using PERI load-carrying equipment, the Instructions for Use and details provided on the Type Plate are always to be taken into consideration!

3. Without exception, all country-specific regulations, standards and other safety regulations must be observed at all times!

4. The contractor must ensure that the Instructions for Use provided by PERI are available and easily accessible for site personnel throughout the duration of the project!

5. The contractor can only assign those persons to independently use load-carrying equipment who are actually familiar with the task!

6. PERI load-carrying equipment is to be used accordingly so that persons are never put at risk in any way!

7. Only sufficiently load-bearing and level storage or stacking areas are to be used!

8. The maximum bearing capacity of PERI load-carrying equipment must not be exceeded!

9. PERI load-carrying equipment must be protected against the effects of the weather and aggressive materials if safety is then likely to be affected!

10. All persons using the load-carrying equipment must check the equipment during use for obvious defects (e.g. deformations, cracks, breaks, incomplete markings)!

11. Damaged or defective load-carrying equipment must not be used!

12. PERI load-carrying equipment may not be used with missing or illegible type plate or inspection plate!

Introduction

Safety Instructions

Product-Specific

1. The person who attaches the load to the load-carrying equipment must be sufficiently secured against falling. The load is to be secured against tipping over and sliding!

2. Ensure loads are evenly balanced when being picked up! Loads must be sufficiently stable both in their form and position so that the load does not move during transportation!

3. Loads are to be moved with the load-carying equipment only during calm or light wind conditions! Safe moving of the elements must be ensured at all times!

4. Depending on the wind-exposed surface of the load and the wind speed, safety can be affected during transportation! A decision regarding safe use is to be taken on site!

5. Persons are not to be transported!

6. Ensure that the load is in a safe and secure position before releasing the load-carrying equipment!

7. Always lift up or set down loads smoothly without any jerking!

8. During the lifting and moving procedure, ensure all loose parts are removed or secured!

9. During transport and storage, the load-carrying equipment must be positioned and secured so that it cannot fall off or slide. Do not place any loads on the load-carrying equipment!

10. Ensure that the steel wire ropes and chains remain knot-free! Do not wrap the lifting chains of the load-carrying equipment around the load to be transported or stretch over sharp edges! Twisted chains must be straightened!

11. The transport of horizontal stacks is not allowed!

Introduction

Intended Use

1. PERI products have been exclusively designed as technical work equipment for use in the industrial and commercial sectors by suitably trained personnel.

2. These Instructions for Use contain information for ensuring correct handling and application.

3. The product described here is load-carrying equipment and serves exclusively for the lifting and moving of individual panels or panel units of the PERI MAXIMO and TRIO systems.
Edge profiles are 60 mm or 20 mm wide with beading (hollow profile).

4. For use in ambient temperatures from -20 °C to +60 °C.

5. Changes and modifications to PERI components are not permitted and represent a misapplication with associated safety risks.

6. Components provided by the contractor must conform with thecharacteristics required in these Instructions for Use as well as allvalid construction guidelines and standards.

In particular, the following apply if nothing else is specified:
timber components: Strength Class C24 for Solid Wood EN 338.
– scaffold tubes: galvanised steel tubing with minimum dimensions Ø 48.3 x 3.2 mm according to EN 12811-1:2003 4.2.1.2.
– scaffold tube couplings according to EN 74.

7. Only PERI original components may be used. The use of other products, especially spare parts, represent a misapplication with associated safety risks.

8. The product described here corresponds to the relevant provisions and regulations of EU Directive 2006/42/EC.

9. These Instructions for Use serve as a basis for the project-related risk assessment as well as instructions for the provision and use of the system by the contractor (user).
However, this do not replace these.

Introduction

Checks and Inspections

1. General
According to §3 Section 3 of the Industrial Safety Regulations, the contractor is responsible for determining the type, range and deadlines regarding the required checks to be carried out on the work equipment. As a result of these checks, any safety-related defects are to be systematically identified and remedied.

2. Purpose
Due to the check carried out before the initial operations as well as regularly recurring inspections of the load-carrying equipment, it can be ensured that operational and functional reliability is guaranteed.

3. Responsibility
The contractor must ensure that the PERI load-carrying equipment is put into operation only if it has been inspected by a qualified person, and that any defects noted have been corrected as well as all non-functional equipment replaced.

4. Inspection
4.1 Instigating the safety inspection
The contractor arranges for an inspection to take place before initial operations of the work equipment begin which is to be carried out by a suitably qualified person.

4.2 Implementing the inspection
The inspection includes a visual and functional check.

Visual Check
- deformation and wear of all parts
- mechanical damage
- availability of all components
- damage due to corrosion
- cracks on welding seams and individual components

Functional Check
- free and easy movement of moving parts
- locking system works correctly
- safety pawls and safety hooks engage
- eyes or shackles for fastening purposes are usable

Implementation of anything beyond the usual scope of inspection is subject to the discretion of the competent person and can extend to additional checks.

4.3 Measures
If any defects are determined during the safety inspection, they must be eliminated according to the instructions provided by the inspector. Subsequently, a new inspection is to be carried out.

Only PERI original components may be used as spare parts.

Application

Identification of the lifting hook

Type Plate

Do not use the Lifting Hook TRIO 1.5 t if the type plate is missing or unreadable!

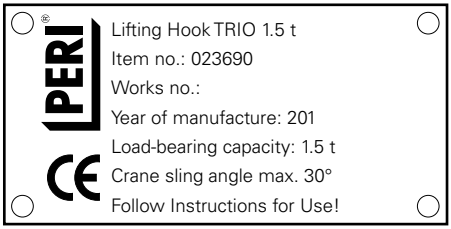

Inspection Plate

Do not use the Lifting Hook TRIO 1.5 t if the inspection plate is missing or is illegible!

Arrange for an inspection to be carried out by a qualified person and then mount a new type plate and/or inspection sticker.

Application

Load-bearing capacity of lifting hook

Moving of other products is not permitted!

Load Factor: 3
(according to DIN 13155)

Load-bearing capacity
Steel Panels 1.5 t, (Fig. 1)
Alu panels 750 kg, (Fig. 2)

E.g. 6 panelsTRIO
TRIO 330 x 240 or. MAXIMO
MX 330 x 240 to be moved as one unit.

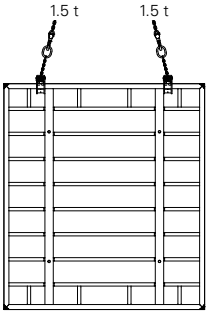

Fig. 1, Steel Panels

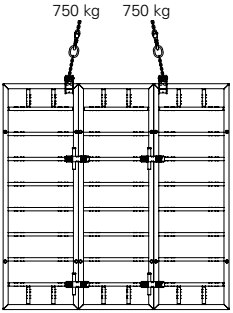

Fig. 2, Aluminium Panels

Max. crane sling angle = 30°
If the spacing L 1 of the Lifting Hook is smaller than the individual chain length L of the lifting gear, then the crane sling angle is ≤ 30°. (Fig. 3)

If the Lifting Hook is used together with the Lifting Gear Combi TRIO, the individual chain length L of the lifting gear is a max. 3.90 m.

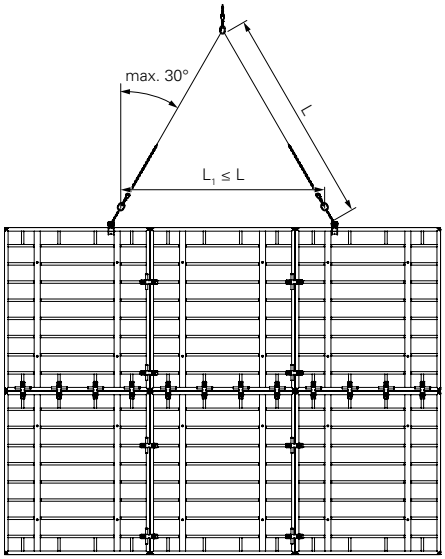

Fig. 3

Application

Assembling the lifting hook

Overloading! Always mount 2 lifting hooks symmetrically to the load centre for each transportation unit - exception: panel width 30 cm!

For panel widths > 30 cm: mount two lifting hooks so that they are supported on the element struts in the direction towards one another. (Fig. 4a)
For panel widths 30 cm: position one lifting hook in the middle. (Fig. 4b)

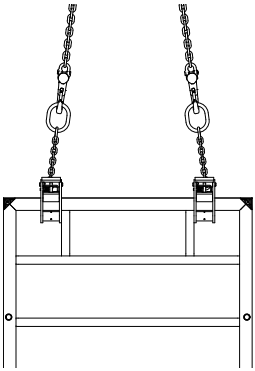

Fig. 4a

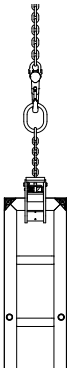

Fig. 4b

Assembly

1. Push back the clamping jaw (2) by hand or with a tie rod against the spring resistance until the outermost position is reached and then push the lifting hook over the edge profile until the support cam (4) is locked in place in the edge profile beading. (Fig. 5a+b)
2. The clamping jaw closes due to spring resistance. The lifting hook is held in a closed position through the strength of the spring, also with traction relief.

If the spring resistance is too weak, the lifting hook must be closed manually and the spring itself must be replaced.

The pressure plate (3) must lie full-faced on the edge profile. (Fig. 5a+b)

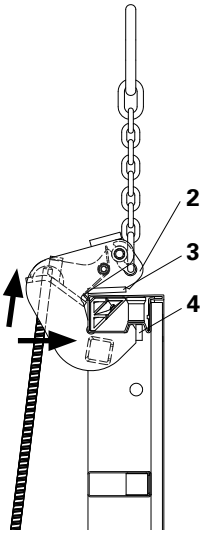

Fig. 5a

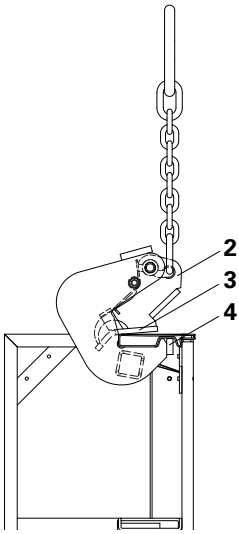

Fig. 5b

Application

Transport of load

Before lifting:

Check the attachment of the lifting hook on the element. (Fig. 6)

During transportation:

Never remain under lifted loads!

After concreting:

Do not release the panels from the concrete with the crane. Uncontrolled movement and overloading!

Setting down:
Never set the load down abruptly. Do not put the lifting hook down onto obstacles.

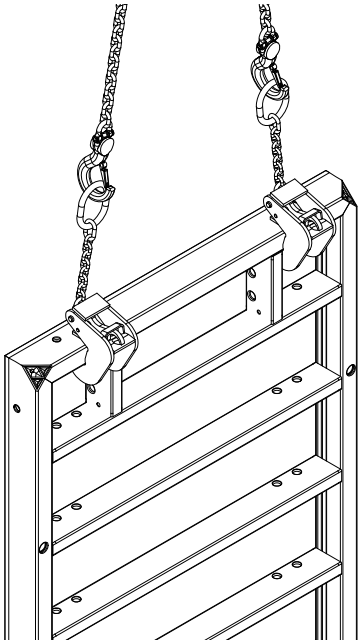

Fig. 6

Application

Dismantling the lifting hookon vertically-positioned panels

Panel can tip over! Support the panel and then release the lifting hook!

Dismantling
Push back the clamping jaw (2) by hand or with a tie rod against the spring resistance until the outermost position is reached and then push the lifting hook to the rear. (Fig. 7 + Fig. 8)

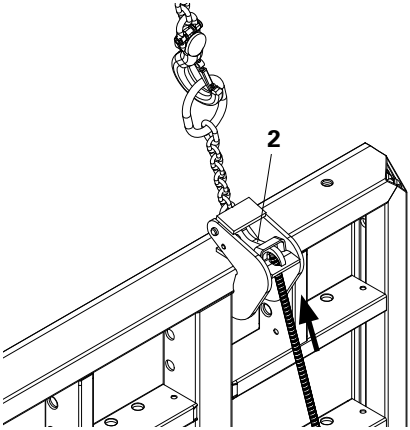

Fig. 7

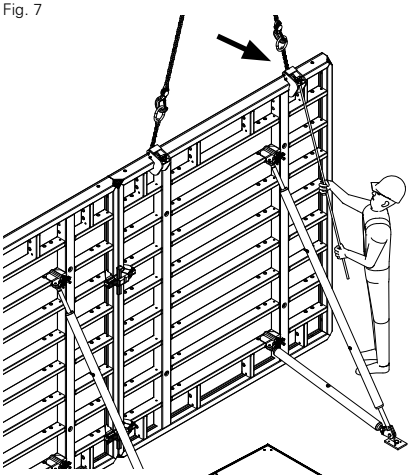

Fig. 8

Dismantling the lifting hook on horizontal panels
Ensure that there is sufficient spacing between a horizontally-positioned panel and one which is to be laid down, e.g. use timbers.
Spacing ≥ 10 cm.
(Fig. 9)

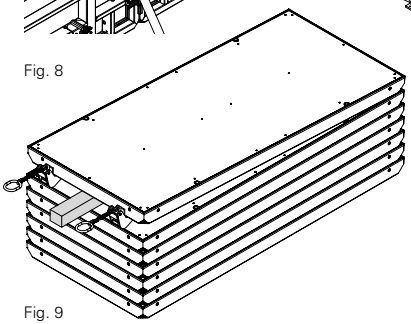

Fig. 9

Components

Item no.	Weight kg		
023690	7,050	**Lifting Hook TRIO 1.5 t** For transportation of TRIO and MAXIMO panels.	**Safety Instructions** Follow Instructions for Use. Load-bearing capacity: Steel panels 1.5 t Aluminium panels 750 kg

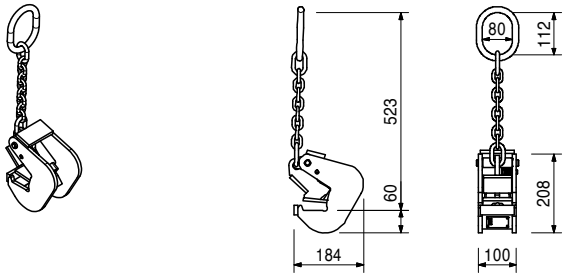

EC Declaration of Conformity

This document is a translation into
English from the German original.

EC Declaration of Conformity

as defined in EU Directive 2006/42/EC
Appendix II, Part 1, Section A

We hereby declare that the following product, due to its design and type as well as the form in which it is marketed, conforms to the relevant basic health and safety requirements of the above-mentioned EU Directive. Any modifications to the product which have not been agreed to by us will invalidate this declaration.

Lifting Hook TRIO 1.5 t
Item no. 023690

Relevant EU Directive:
EU Machine Guidelines 2006/42/EC

Applied European standards:
EN 818, EN 1677, EN 12812, EN 13155

Applied national standards and technical specifications:
DIN 1052, DIN 1055, DIN 18800, BGR 500

Weissenhorn, 04. April 2012

ppa. Dipl.-Ing. Werner Brunner
Key Projects

PERI GmbH
P.O. Box 12 64
89259 Weissenhorn / Germany
www.peri.de

The optimal System for every Project and every Requirements


Wall Formwork


Column Formwork


Slab Formwork


Climbing Systems


Tunnel Formwork


Bridge Formwork


Shoring Systems


Construction Scaffold


Facade Scaffold


Industrial Scaffold


Access


Protection Scaffold

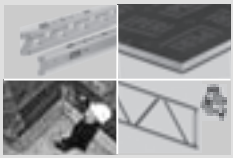
System-Independent Accessories


Services

DE en 05 | 2012 1ma 790478 © PERI GmbH

PERI GmbH
Formwork Scaffolding Engineering
P.O. Box 1264
89259 Weissenhorn
Germany
Tel. +49 (0)7309.950-0
Fax +49 (0)7309.951-0
info@peri.com
www.peri.com